KONAMI GAMING

Konami Gaming, Inc.

K2V 1.5

Operators Manual

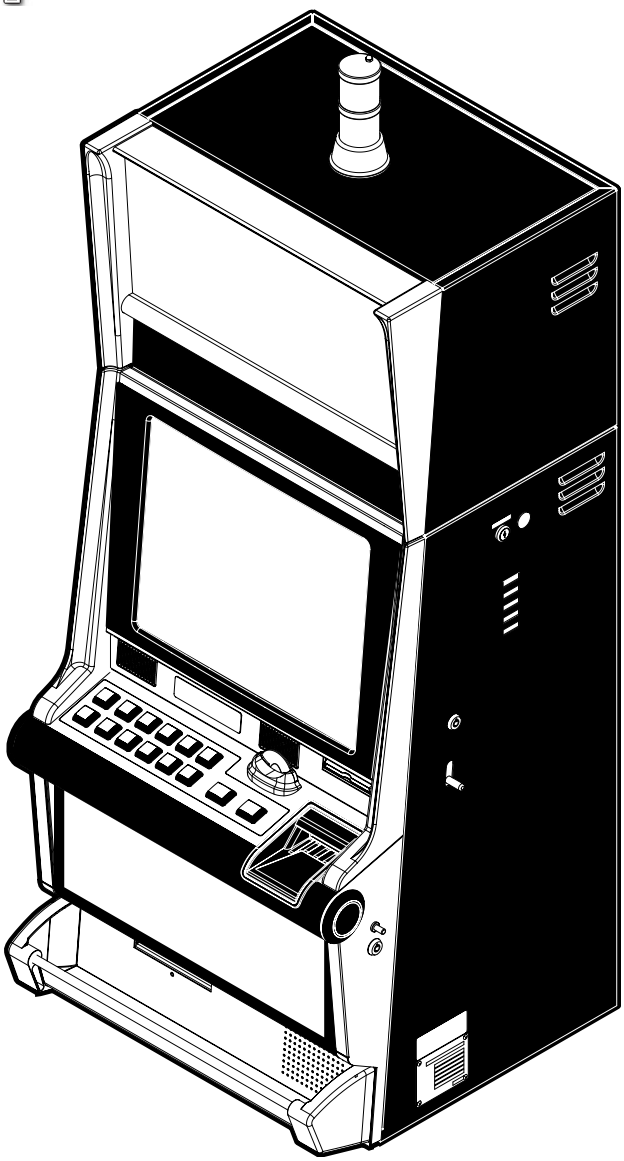

585 Trade Center Drive
Las Vegas, NV 89119-3720
Phone: (866) KGI-SLOT
Fax: (702) 361-9020

PN 810028 (B)

KONAMI GAMING

Module 1
Introduction

Radio Interference 1-1
Overview 1-1
Features 1-2
K2V 1.5 Series Upright Video 1-2
Hardware Features 1-2
Hardware Options 1-2
Terminology 1-2
Notices 1-2
Customer Support 1-3
Warranty and RMA Process 1-3
Warranty Policy 1-3
RMA Process 1-3
Shipping Charges 1-3
Serial Number Plate 1-3
Location of Serial Number Plate 1-3

Module 2
Set-Up & Operation

Overview 2-5
Cabinet Specifications 2-5
Unpack and Inspect 2-5
Installing the Candle 2-6
Stand Drill Guide 2-6
Candle Pin Assignment 2-6
Drop box Switch 2-6
Check 2-6
Drop Box Switch Pin Assignment 2-7
Slot Accounting System 2-7
Overview 2-7
Connections 2-7
Fiber Optic 2-7
SAS Bracket 2-7
Turning Off the Power Switch 2-8
Installation 2-8
Initialization 2-8
Serial Number and Lot Number 2-8
Referring To The Stamped Serial Number 2-9
Opening and Closing the Doors 2-9
Main Door 2-9
Sub-Door (Belly Door) 2-9
Bill Validator Door (Sub Door Open) 2-9
Bill Validator Door (Main Door Open) 2-9
Top Box (B-Top) 2-10
Logic Door 2-10
Changing Locks 2-10
Lock Dimensions 2-10
Lock Hardware 2-10
Lock Cams 2-10
Main Door Lock 2-11
Logic Door Lock 2-11
Sub-Door Lock 2-11
Bill Validator Door Lock 2-12
Top Box Door 2-12
Setting the Hopper Level Probe 2-12
Coin Acceptor Sample Coin 2-12
Option the Bill Acceptor (Factory Preset) 2-12
Startup 2-13
Inspection of the cabinet 2-13
Inspection of the use environment 2-13
Inspection after connecting the AC plug to the receptacle 2-13
Turning On the Power Switch 2-13
Clearing the Backup Memory 2-13
EL Key (I-Button) 2-13
EL Key Levels 2-13
Setting Undefined Options 2-13
Procedure for All Reset 2-13
Setting Options 2-14
Restart the Machine by Changing the EL Key 2-14
Returning from the KMS 2-14
Recovering from Error 2-14
Starting up (normally) 2-14
Operation 2-14
Game Screen 2-14
(A) SUB-GAME AREA 2-14
(B) GAME AREA 2-14
(C) DASHBOARD 2-14
Help and Pay Table 2-15
Help and Paytable (cont.) 2-15
Collecting Coins 2-16
Player/Operator Interface 2-16
Change Button 2-16
Cashout Button 2-16
Select Line Buttons 2-16
Bet X Per Line Buttons 2-16
Spin Button 2-16
Bill Validator (Bill Entry) 2-16
Coin Head 2-16
Ticket Printer 2-16
LCD Touchscreen 2-16
Refilling Hopper 2-17
Collecting Bills 2-17
Collecting Coins 2-17
Audit Mode 2-17
How to Enter and Exit Audit Mode 2-17
KONAMI Maintenance System (K.M.S) Main Menu 2-17
Common Operation switches 2-18
Software Meters 2-18
Software Meters-Audit Meters- General - Page 1/20 2-18
Software Meters-Audit Meters-Detail Page 2/20 2-19
Software Meters-Audit Meters-Detail Page 3/20 2-19
Software Meters-Audit Meters-Detail Page 4/20 2-20
Software Meters-Audit Meters-Detail Page 5/20 2-20
Software Meters-Audit Meters-Detail Page 6/20 2-21

Software Meters-Audit Meters-Detail Page 7/20 2-21
Software Meters-Bill Meters-Page 8/20 2-22
Software Meters-Voucher Log-Page 9/20 2-22
Software Meters-Cashout Log-Page 10/20 2-23
Software Meters-Cash Ticket Log-Page 11/20 2-23
Software Meters-Jackpot Receipt Log-Page 12/20 2-23
Software Meters-EFT Log-Page 13/20 2-24
Software Meters-System Bonus Log-Page 14/20 2-24
Software Meters-Progressive Jackpot Log-Page15/20 .. 2-24
Software Meters-Game Meters-General-Page 16/20 2-25
Software Meters-Game Meters-Detail-Page 17/20 2-25
Software Meters-Game Meters-Detail-Page 18/20 2-26
Game Recall 2-26
Event 2-27
Event Meter 2-27
Event Log 2-27
Options 2-28
Setting Options 2-28
Menu Description 2-28
Coin Acceptor Options 2-29
Bill Validator Options 2-30
Setting Bill Validator Option-Bill Validator Type 2-30
Setting Bill Validator Option-Accept Bill $1 2-30
Setting Bill Validator Option-Accept Bill $2 2-31
Setting Bill Validator Option-Accept Bill $5 2-31
Setting Bill Validator Option-Accept Bill $10 2-31
Setting Bill Validator Option-Accept Bill $20 2-31
Setting Bill Validator Option-Accept Bill $50 2-32
Setting Bill Validator Option-Accept Bill $100 2-32
Setting Bill Validator Option-Accept Bill $500 2-32
Setting Bill Validator Option-Redeem Voucher 2-32
Setting Bill Validator Option-Bill Stacker Alarm 2-33
Options -Touch Screen Option 2-33
Setting Touch Screen Option On/Off 2-33
Options-Door Option 2-34
Setting Coin Drop Door Option 2-34
Options-EM Counter Option 2-35
Setting EM Counter 1 (Total In) 2-35
Setting EM Counter 2 (Total Out) 2-36
Setting EM Counter 3 (Total Drop) 2-36
Setting EM Counter 4 (Jackpot Attendant Pay) 2-36
Setting EM Counter 5 (Total Bills In) 2-36
Setting EM Counter Access 2-37
Sound Option 2-37
Setting Sound Volume 2-37
Hopper Option 2-38
Setting Hopper On/Off 2-38
Printer Option 2-38
Setting Printer ON/OFF 2-39
Setting Printer Type 2-39
Setting Ticket-Out Sound 2-40
System Option 2-40
System Options-Machine Number 2-41
Setting Machine Number 2-41
System Options-Asset Number 2-42
Setting Asset Number 2-42
System Options-Auto Cashout 2-42
Setting Auto Cashout 2-42
System Options-Credit Intervention 2-43
Setting Credit Intervention 2-43
System Options-Allow Partial Pay 2-43
Setting Allow Partial Pay 2-43
System Options-Credit Limit 2-44
Setting Credit Limit 2-44
System Options-Machine Cashout Limit 2-44
Setting Machine Cashout 2-44
System Options-Hopper Cashout Limit 2-45
Setting Hopper Cashout Limit 2-45
System Options-Hopper Cashout Limit 2 2-45
Setting Hopper Cashout Limit 2 2-45
System Options-Ticket Limit 2-46
Setting Ticket Limit 2-46
System Options-Reset Jackpot To Credit Meter 2-46
Setting Reset Jackpot To Credit Meter 2-46
System Options-Jackpot Limit 2-47
Setting Jackpot Limit 2-47
System Options-Reset Jackpot Limit 2-47
Setting Reset Jackpot Limit 2-47
System Options-Player Denomination $0.01 2-48
Setting Player Denomination $0.01 On/Off 2-48
System Options-Player Denomination $0.02 2-48
Setting Player Denomination $0.02 On/Off 2-48
System Options-Player Denomination $0.05 2-49
Setting Player Denomination $0.05 On/Off 2-49
System Options-Player Denomination $0.10 2-49
Setting Player Denomination $0.10 On/Off 2-49
System Options-Player Denomination $0.25 2-50
Setting Player Denomination $0.25 On/Off 2-50
System Options-Player Denomination $1.00 2-50
Setting Player Denomination $1.00 On/Off 2-50
System Options-Default Game Denom. 2-51
Setting Default Game Denom. 2-51
System Options-Progressive Denom. 2-51
Setting Progressive Denom. 2-51
System Options-Token Denomination 2-52
Setting Token Denomination 2-52
System Options-Residual Credit 2-52
Setting Residual Credit 2-52
Online System Option 2-53
Online System Option-Comm Port 1 Protocol 2-53
Setting Comm Port 1 Protocol 2-54
On Line System Option-Comm Port 1 Address 2-54
Setting Comm Port 1 Address 2-54
On Line System Option-Comm Port 1 Lockup 2-54
Setting Comm Port 1 Lockup 2-55
Online System Option-Comm Port 2 Protocol 2-55
Setting Comm Port 2 Protocol 2-55
On Line System Option-Comm Port 2 Address 2-55
Setting Comm Port 2 Address 2-56
On Line System Option-Comm Port 2 Lockup 2-56

 © 2004 KONAMI GAMING

Setting Comm Port 2 Lockup 2-56
Online System Option-Comm Port 3 Protocol 2-56
Setting Comm Port 3 Protocol 2-57
On Line System Option-Comm Port 3 Address 2-57
Setting Comm Port 3 Address 2-57
On Line System Option-Comm Port 2 Lockup 2-57
Setting Comm Port 3 Lockup 2-58
Setting Tickets/Vouchers-Ticket Port 2-58
Setting Tickets/Vouchers-Coupon Port 2-58
Setting Tickets/Vouchers-Validation Scheme 2-58
Setting Tickets/Vouchers-Print Receipts 2-59
Setting Machine Control-Port Number 2-59
Setting EFT Control-Port Number 2-59
Setting System Bonus Control-Port Number 2-59
Setting Progressive Control-Progressive Port 2-60
Setting Progressive Control-Mystery Jackpot Port . 2-60
Progressive Option 2-60
Progressive Option-Top Award Type 2-61
Setting Top Award Type 2-61
Setting Group ID 2-61
Setting Max Levels 2-61
Setting Mystery Jackpot Type 2-62
Setting Mystery Jackpot Threshold 2-62
Game Option 2-62
Pay Table For $0.01 Game 2-63
Setting Pay Table For $0.01 Game 2-63
Setting Pay Table For $0.02 Game 2-63
Setting Pay Table For $0.05 Game 2-63
Setting Pay Table For $0.10 Game 2-64
Setting Pay Table For $0.25 Game 2-64
Setting Pay Table For $1.00 Game 2-64
Setting Play Line Max 2-64
Setting Bet Max 2-65
Setting Attract Mode On/Off 2-65
Setting Sound Level 2-65
Setting Interval 2-65
Setting Cash Display 2-66
Accounting Denom Option 2-66
Options-Accounting Denom Option 2-66
Setting Accounting Denom 2-66
Diagnostic 2-67
Diagnostic-Main Menu 2-67
Diagnostic-System Information 2-67
Diagnostic-System Information-ROM Information 2-68
Diagnostic-Game Information 2-68
Diagnostic-Touch Screen 2-69
Diagnostic-Touch Screen-Controller ID 2-69
Controller ID 2-69
Diagnostic-Touch Screen-Touch Test 2-69
Diagnostic-Touch Screen-Calibration 2-70
Diagnostic-In-Port 2-71
In-Port (Button/Mechanical Switch Test) 2-71
Diagnostic-Out-Port 2-71
Out-Port (Lamp Check) 2-72
Diagnostic-Coin Acceptor 2-73
Diagnostic-Coin Acceptor-Enable/Disable 2-73
Diagnostic-Coin Diverter-To Coin Drop/Hopper 2-73
Diagnostic-Bill Validator 2-74
Diagnostic-Coin Hopper 2-74
Diagnostic-Ticket Printer 2-75
Diagnostic-Demonstration Print 2-75
Diagnostic-Now Printing 2-76
Diagnostic-Successful Print 2-76
Failed Demonstration Print 2-76
Diagnostic-CD-ROM Drive 2-76
Diagnostic-Sound 2-77
Diagnostic-Sound-Sound Volume 2-77
Diagnostic-Sound-Sound Code 2-77
Diagnostic-Screen 2-78
Diagnostic-Screen-Color Bar Screen 2-78
Diagnostic-Screen-Crosshatch Screen 2-78
Diagnostic-Communication Information 2-79
Diagnostic-Game Test 2-79
Diagnostic-Game Test-Reel 1 Position 2-80
Diagnostic-Game Test-Reel 2 Position 2-80
Diagnostic-Game Test-Reel 3 Position 2-80
Diagnostic-Game Test-Reel 4 Position 2-80
Diagnostic-Game Test-Reel 5 Position 2-81
Diagnostic-Game Test-Total Line 2-81
Diagnostic-Game Test-Bet Per Line 2-81
Diagnostic-I/O Test Extras 2-81
Diagnostic-I/O Test Extras-EM Counter 2-82
EM Counter 2-82
Diagnostic-I/O Test Extras-UART 2-82
Diagnostic-I/O Test Extras-Option In-Port 2-83
Option In-Port 2-84
Diagnostic-I/O Test Extras-Option Out-Port 2-84
Option Out-Port 2-84
Clock & Misc. 2-85
Out of Service 2-85
Jumper Sockets 2-86
I/O Drive A Board (IOAB-2) 2-86
JP2, JP3 and JP4: 2-86
JP5 and JP6: 2-86
JP7, JP8 and JP9: 2-86
I/O Drive B Board (IOBB-2) 2-87
JP1 2-87
LS240 (IC socket): 2-87

 © 2004 KONAMI GAMING

Module 3
Parts, Assemblies & Hardware

Overview 3-89
Required Tools 3-89
Commonly-Used Hardware 3-90
Functional Overview 3-90
Parts Removal 3-91
- Main Door Switch 3-91
- Topbox Door Switch 3-91
- Belly Door Switch 3-91
- Switch Wiring 3-91
- Hopper 3-92
- Power Supply 3-92
- Bill Validator 3-92
- Logic Unit 3-92
- I/O Drive B Board (IOBB-2) 3-92
- I/O DriveA Board (IOAB-2) 3-92
- CD/Logic Unit 3-93
- Main Control Board (MCTB) 3-93
- Communication Board (COMB-2) 3-93
- Logic Unit Switch 3-93
- Backplane Board (BCKB-3) 3-93
- Key Switch 3-94
- Printer Assembly 3-94
- Feature Glass 3-94
- Belly Glass 3-94
- Power Control Assembly 3-94
- Bill Validator Door Switch Assembly 3-95
- Door Lock Sensor 3-95
- LCD Unit 3-95
- Speakers 3-95
- Meter Unit 3-95

Main Machine Assembly 3-97
Main Cabinet 1 Assembly 3-98
Main Cabinet 2 Assembly 3-99
Main Door 1 Assembly 3-100
Main Door 2 Assembly 3-101
Main Topbox (Casino) Box Assembly 3-102
330334 Main Topbox (Casino) Door Assembly 3-102
Main Topbox (Extended) Box Assembly 3-102
330335 Main Topbox (Extended) Door Assembly 3-102
Main Topbox (Round) Box Assembly 3-103
330336 Main Topbox (Round) Door Assembly 3-103
330095 Bill Validator Housing Assembly 3-103
330099 BV Door Switch Assembly 3-103
330094 Power Control Panel Assembly 3-104
330297 CPU Housing Assembly 3-104
330303 Power Supply Assembly 3-105
330003 Hard Meter Assembly 3-105
330300 Coin Bowl Assembly 3-105
330173 Bolster Assembly 3-106
330304 Coin Handling Assembly 3-106
330302 Belly Door Assembly 3-106
330035 Seiko Printer Assembly 3-106
330058 Ithaca 850 Printer Assembly 3-106
330039 Ithaca 860 Printer Assembly 3-106
330305 Printer,Seiko,Gen 2 Assembly 3-107
330301 Coin Panel Assembly 3-107
330111 Top Box Fluorescent Assembly 3-107
330344 Assy,Pnl, Light Reflt. Ext. Top Box 3-107
330152 Fluorescent Lt. Assembly Round Top Box 3-107
330012 Ballast & Starter Assembly 3-108
330299 Button Panel (Multi-Line) Assembly 3-108
530218 19" LCD Assembly 3-108
310001 Bill Validator Assembly (JCM WBA 13) 3-108
310010 Bill Validator Assembly (JCM WBA 12SS) 3-108
310027 Bill Validator Assembly (Mars ZT-1207) 3-108
310092 Bill Validator Assy (MARS,SC66XX,Cashflow) 3-108
Hopper Assembly 3-109
330367 Bill Entry Assembly 3-109
330368 Bill Entry Assembly (69MM) 3-109
630004 Signal Tower, Two Tier, Chrome (Tall) 3-109
630007 Signal Tower, Two Tier, Chrome (Short) 3-109
630016 Signal Tower, Two Tier, Gold (Short) 3-109
630015 Signal Tower, Two Tier, Gold (Tall) 3-109
630025 Signal Tower,3 Tier,Short,Chrome 3-109
630026 Signal Tower,3 Tier,Short,Gold 3-109
330001 CD/Logic Assembly 3-110
330103 CD/Logic Assembly (Low Profile) 3-110
330171 CD Assembly (Low Profile) 3-110
330296 Door Sensor Assembly (Cabinet) 3-110
330295 Door Sensor Assembly (Door) 3-110

Module 4
Troubleshooting

Troubleshooting Charts 4-111
Reset/Start Errors 4-111
Door Status Errors 4-111
Attendant Pay Codes 4-112
Coin Acceptor/Diverter Errors 4-112
Hopper Errors 4-112
Electromechanical Meter Errors 4-113
Bill Validator Errors 4-113
DCNB (Door Connector PCB) Errors 4-114
RTC (Real Time Clock) Errors 4-114
EL (Electronic Key) Errors 4-114
Communication Errors 4-115
Touch Screen Errors 4-115
CD ROM Errors 4-115
Thermometer Errors 4-116
Circuit Breaker Errors 4-116
Printer Errors 4-116
ROM Version Errors 4-116
RAM Errors 4-117
EEPROM Errors 4-117
Option Change Errors 4-117
Low Battery Errors 4-117
Program Errors 4-117
Self Diagnostic On Boot Errors 4-117

Self Diagnostic On Boot Errors (Cont.) 4-118
Self Diagnostic On Boot Errors (Cont.) 4-118
CPU Exception Errors 4-119
CPU Exception Errors (Cont.) 4-119
Door Errors 4-119
Door Errors (Cont.) 4-120
Suspended Operation 4-120
Jackpot Reset 4-120
Attendant Pay 4-120
Error Message in Display 4-120
Coin Jamming 4-120
Installing a Sample Coin (Coin Mech) 4-120
Adjusting the Coin Comparitor (Coin Mech) 4-121
Coin Learn Procedure (IDX) 4-121
Teach and Run Procedure (Condor) 4-121

Module 5
Preventative Maintenance

Overview 5-123
Hopper 5-123
- Overview 5-123
- Removal 5-123
- Inspection (90 Day Interval) 5-123
- Cleaning (90 Day Interval) 5-123
- Lubrication 5-123
- Adjust Hopper Knife (180 Day Interval) 5-123
- Adjust Hopper Coin Out Sensor (180 Day Interval) 5-123
- Set Hopper Coin-Level Probe Circuit (As Required) 5-124

Coin Acceptor 5-124
- Overview 5-124
- Removal 5-124
- Inspection (90 Day Interval) 5-124

Coin Diverter 5-124
- Overview 5-124
- Inspection (90 Day Interval) 5-124

Bill Acceptor 5-124
- Overview 5-124
- Inspection (90 Day Interval) 5-124
- Removing/Opening the Validator Head & Transport Unit 5-124

Validator Module 5-124
LCD Assembly 5-125
- Overview 5-125
- Inspection (90 Day Interval) 5-125
- Cleaning (90 Day Interval) 5-125
- LCD Controls (Overview) 5-125
- OSD Adjustment 5-125
- Calibrate Touch Screen (180 Day Interval) 5-125

CPU/CDROM Assemblies 5-125
- Overview 5-125
- Cleaning (180 Day Interval) 5-125
- Cabinet 5-126
- Inspection (90 Day Interval) 5-126

Buttons 5-126
- Overview 5-126
- Inspection (90 Day Interval) 5-126

System Battery 5-126
- Overview 5-126
- Replace System Battery (24 Month Interval) 5-126
- Changing the Batteries 5-126
- Removal 5-126
- Installation 5-126

Module 6
Wiring Diagrams

Overall Wiring Diagram 6-128

Module 7
Glossary & Index

Glossary 7-129
Index 7-132

Module 8
Appendix

Lights 8-137
Electrical Components 8-137
Fuses 8-137
Calibration Paper 8-137
PCBs 8-138
- Board Components 8-138
- Main Control (MCTB) 8-138
- Backplane (BCKB-3) 8-138
- Communication (COMB-2) 8-138

Hopper Components 8-138

 © 2004 KONAMI GAMING

THIS PAGE INTENTIONALLY LEFT BLANK

© 2004 KONAMI GAMING

Module 1

Introduction

1.

Date of Publication: 07/19/2005
Part Number: 810028 (B)

Konami Gaming, Inc.

K2V 1.5

Operators Manual

This manual subject to revision.
Konami Gaming, Inc. distributes all revisions.
© 2004 Konami Gaming, Inc.
ALL RIGHT RESERVED
Reproduction in whole or part of this manual by photographic, electronic or any other form of recording is prohibited by law. This manual may not be transmitted or copied for public or private use without the express consent of Konami Gaming, Inc.

For permission write:
Konami Gaming, Inc.
585 Trade Center Drive, Las Vegas, NV 89119-3720

Customer Service & RMA Information, Installation & Field Service, call:
Phone: (866) KGI-SLOT
Fax: (702) 361-9020

Domestic Sales, call:
Phone: (866) KGI-INFO
Fax: (702) 952-1596

Radio Interference

This device complies with part 15 of the FCC Rules. Operation is subject to the following 2 conditions: This device may **NOT** cause harmful interference, and this device must accept any interference received including interference that may cause undesired operation. Improper installation or maintenance may result in radio interference.

Overview

This manual is for operators, technicians and KGI service personnel. It provides useful information for operating the KGI K2V 1.5 Series video gaming machine to aid in the set up, operation and maintenance of the machine. It provides required information such as an introduction to the equipment, operation, handling errors, troubleshooting tables and maintenance. This manual describes the following items.

Module 1 Introduction

Module 1 contains general machine information, contact information, a description of manual content, and a general list of features.

Module 2 Set Up & Operation

Module 2 contains installation, set up and operational information for use in installing, configuring and optioning a machine in the field.

Module 3 Parts, Assemblies & Hardware

Module 3 describes machine components, the removal and installation of these components, and an illustrated parts manual.

Module 4 Troubleshooting

Module 4 contains the troubleshooting tables necessary to diagnose and repair errors or malfunctions.

Module 5 Maintenance

Module 5 lists the maintenance required to keep the machine error free and performing as designed.

Module 6 Wiring Diagrams

Module 6 contains the overall wiring diagram drawings for the components in the machine.

Module 7 Glossary & Index

Module 8 Appendix

Features

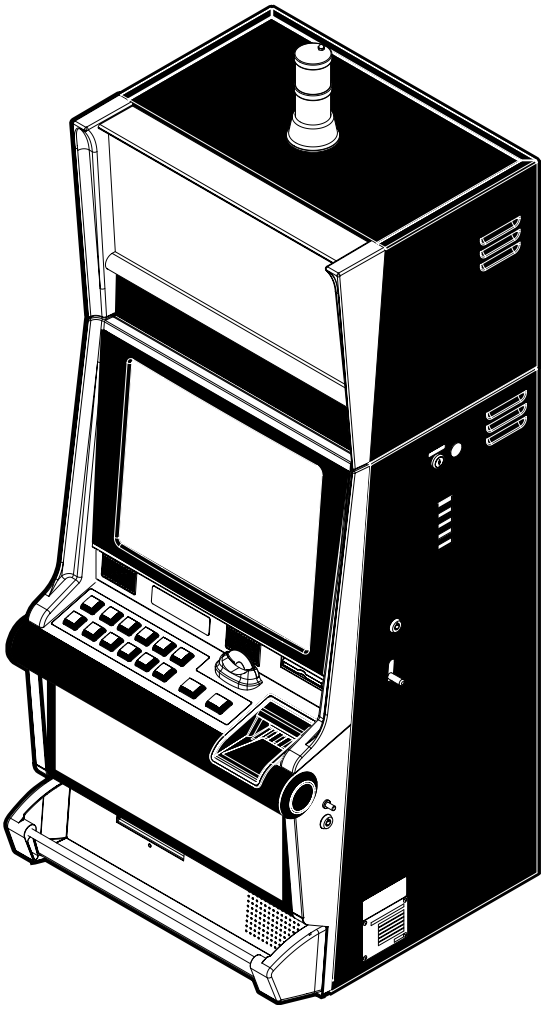

K2V 1.5 Series Upright Video

Hardware Features

- **Flat 19" LCD Display**
  Crisper graphics, better resolution.
  Screen angled for player comfort.
  Hardware included provides touch screen functionality.
- **Ergonomically designed Button Panel**
  Large rounded rubber molding for greater player comfort.
- Logical button layout.
- **JCM WBA-13-SS Bill Acceptor Standard**
- **Coin Mechanisms MC-40 Coin Acceptor**
- **Seiko PSA-66-ST or Ithaca Series 850/860 Printer**
- **Serial Ports (3)**
  Slot accounting, progressive, remote audit recorder, external extended serial port, test port.

Hardware Options

- **Bill Acceptors**
  JCM WBA-13-SS
  JCM WBA-22-SS
  JCM UBA-10-SS (plastic model)
  Mars ZT1200 series
  MEI Cashflow SC series.
- **Coin Acceptors**
  Coin Mechanism MC-40
  Coin Controls CN130 Condor
  IDX X-10
  Microsystems Microcoin QL
- **Printer**
  Future Logic PSA-66-ST, PSA-66-ST2
  Ithaca Model 850, 750
  JCM TSP-200
  Future Logic GEN II

Terminology

The term **Machine** is used throughout this manual and is defined as a physical piece of electromechanical equipment designed and manufactured by Konami Gaming, Inc.. This equipment is only for sale and use as an amusement apparatus or in jurisdictions permitting such devices.

The term **Game** is used throughout this manual and is defined as the programmed operation of the machine after money, tokens, coupons, or equivalent are accepted. Typical game characteristics include, player interaction with the machine through the use of buttons or touch screen, video reels spinning and stopping at programmed stop locations, and payout of coins, tokens, coupons, or equivalent when reel symbol combinations appear on the payline and match the game's paytable.

The term **Operator** is used throughout this manual and is defined as any person, partnership, company, or corporation, and/or their legal representatives, who own, operate, service, maintain, and/or derive profit from their association with this machine.

The term **Player** is used throughout this manual and is defined as any person who deposits money, tokens, coupons, or equivalent into the machine described in this manual for the purpose of playing the games offered by the machine as defined by the rules and odds set by the machine's Operator.

Notices

This document provides the following important notes.

This symbol indicates a **CAUTION** or **WARNING**. These indicate actions or situations that can be damaging or dangerous to you or your equipment. Read and observe all cautions and warnings.

This symbol indicates a note or tip. Notes and tips are items of special interest pertaining to the section or procedure you are reading about. They typically augment or clarify the material.

Customer Support

Konami Gaming, Inc. is committed to offering the highest quality 24 hour, 7 day a week, technical support. Service calls can be requested by calling 1-866-KGI-SLOT. E-Mail support can be requested at kgi-support@konami.com. All calls are logged into a database to track response times, the nature of the calls and developing trends.

Warranty and RMA Process

Warranty Policy

Warranty: 90 days parts and labor from date of sale.

RMA Process

- RMA tags are included in the spare parts kit.
- RMA numbers are issued by calling the Customer Support Hotline at 1-866-KGI-SLOT.
- Parts returned to Konami Gaming, Inc. will only be accepted with an RMA number. Please do **NOT** send any parts back without an RMA number.
- Once a replacement part is issued, the Operator has 30 days to return the old part without being charged. If the old part is not returned within 30 days, the Operator will be charged the full retail price for the item.

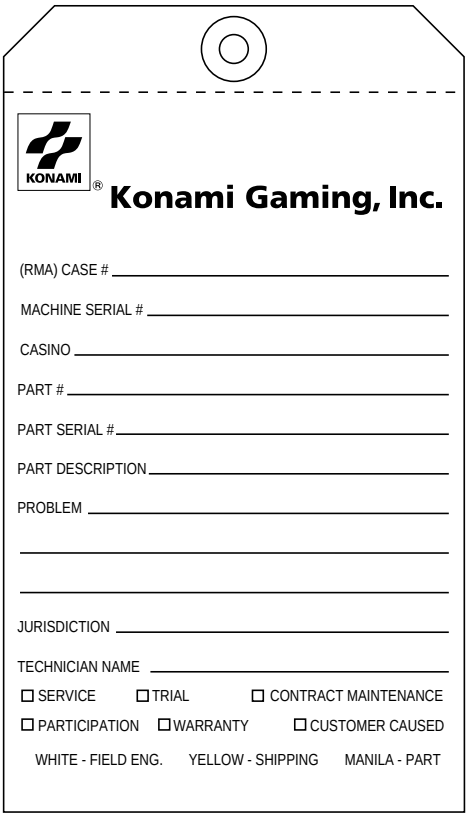

NOTE: RMA tags are used to repair damaged equipment to its original state of operation. Filling the RMA tag completely is required before any repair is attempted.

Shipping Charges

- Konami Gaming, Inc. pays for standard ground shipping on warranty items only.
- The Operator is responsible for shipping charges on expedited delivery or non-warranty items.

Serial Number Plate

All requests for service or RMA replacement require the machine serial number, located on the lower right side of the cabinet. See the illustration below for location of the serial number plate.

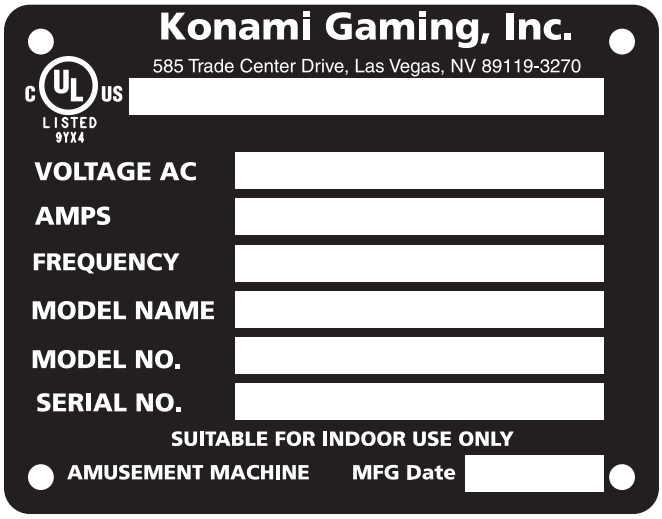

Serial Number Plate

Location of Serial Number Plate

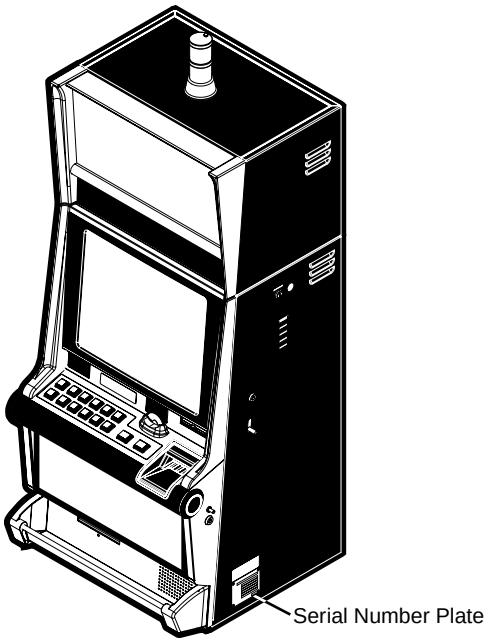

NOTE: UL approved top boxes have a Serial Number Plate attached to the top box on the back lower left side of the top box.

© 2004 KONAMI GAMING

THIS PAGE INTENTIONALLY LEFT BLANK

 © 2004 KONAMI GAMING

Module 2

Set-Up & Operation

2

Overview

This Module addresses the installation, setup and operation of the machine. The sections in this module cover:

- Environmental Specifications
- Unpacking and Inspecting
- Candle (Signal Tower) Installation
- Drop Box Door Switch
- Slot Accounting System
- Opening and Closing Doors
- Lock Installation
- Setting the Hopper Level Probe
- Installing Coin Acceptor Sample Coin
- Option the Bill Validator
- Power-Up
- Clearing RAM
- Options Setting

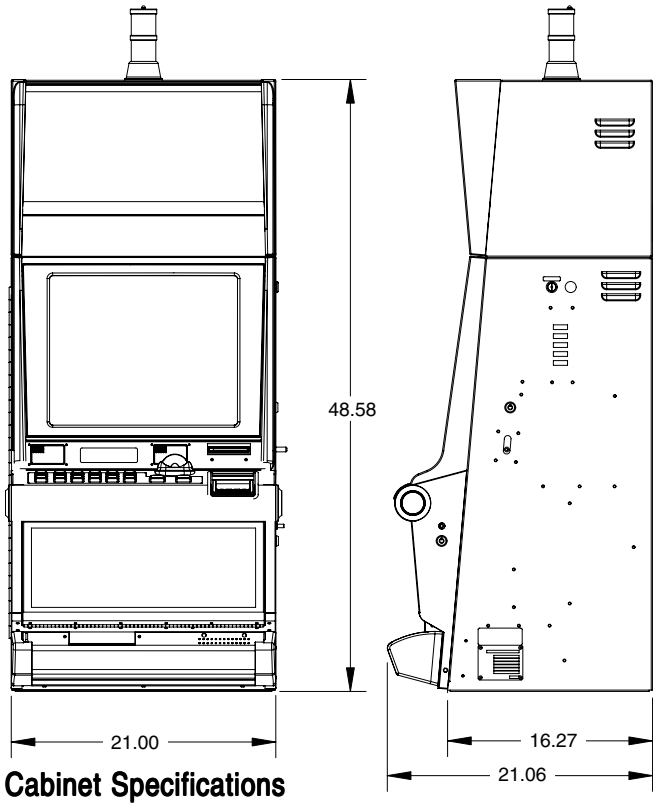

Cabinet Specifications

Height (Casino Top)	**48.58”**
Height (Round Top)	**52.55”**
Height (Extended Top)	**52.03”**
Depth (At Coin Bowl)	**21.06”**
Depth (Cabinet Only)	**16.27”**
Width (Cabinet)	**21.00”**
Weight	**234.5lbs.**

Environmental Specifications

Line Voltage Input: 100 to 240 VAC; 50 or 60 Hz (240 VAC requires step-down transformer). The following calculations are based on 115 VAC input voltage:

- Power supply input 110 VAC: 108 to 120 VAC (nominal 115VAC) at 50/60 Hz.
- Power supply output +12 VDC, +24 VDC.
- Current draw at rest: 1.1 Amps (127 Watts).
- Current draw during game play: 1.1 Amps (127 Watts).
- Current draw during payout: 1.3 Amps (150 Watts).
- Maximum operating ambient temperature: 104° F (40° C).
- Minimum operating ambient temperature: 32° F (0° C).
- Maximum surface ambient temperature: 105° F (41.5° C).
- Minimum surface ambient temperature: 32° F (0° C).
- Maximum relative humidity: 95% (non-condensing).

Unpack and Inspect

Unpack and inspect the machine before power is turned on. If the machine has been damaged during shipping, contact your Konami Distributor, or Konami Customer Service Representative depending on warranty and sales contract terms.

For Return Merchandise Authorization (RMA) information, see Module One of this manual.

Carefully unpack and remove all loose parts and shipping materials. Inspect components for damage. Verify the power cord is properly routed out of the cabinet. Verify all wire connectors are firmly seated. Check all display areas for signs of broken glass or bulbs.

© 2004 KONAMI GAMING

Installing the Candle

Open the top box door. Pass the connector of the candle through the "Z" shaped hole in the top of the top box. Then, mount the candle inside the top box using the two UNC 8-32-inch screws. Connect the candle connector so that the candle stays horizontal. If so equipped, secure the frame ground (FG) wire of the candle with one of the 8-32 screws. Close and lock the door. Turn the power on and make sure that the candle illuminates.

NOTE: If the tower light is not required, order PN 190679 (Cover, Candle Opening, Round Top Box) or PN 190680 (Cover, Candle Opening, Sq. Top Box) to conceal the mounting hole.

Stand Drill Guide

Use the following illustration to locate the mounting, drop and power cord holes.

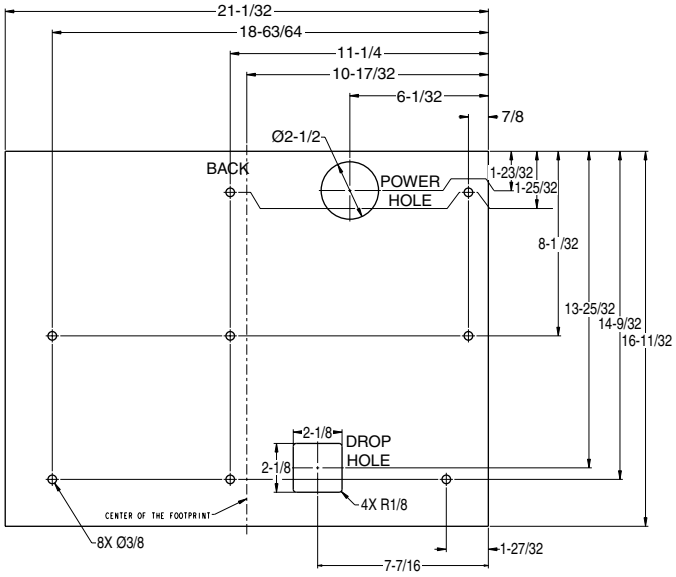

Candle Pin Assignment

CANDLE PIN ASSIGNMENT			
PIN NUMBER	WIRE COLOR	SIGNAL ASSIGNED	LIGHT LOCATION
1	Brown	Candle 1	BOTTOM
2	Blue	Candle 2	
3	Violet	Candle 3	
4	Grey	Candle 4	
5	White	Candle 5	TOP
6	Yellow	+24V	

Drop box Switch

NOTE: The drop box switch wiring is typically used ***ONLY*** when the machine is not connected to a slot accounting system.

Open the main door. Locate the connector labeled "DROP" (CN4 on the main cabinet harness). Connect the optional drop switch harness (PN 110324). Connect the three spade connectors to the drop switch.

Check

If the following problems arise before turning on the power, check that the drop box switch is installed properly.

If the following problem arises after turning on the power, check that drop box switch is installed properly.

- The ***981 DROP DOOR ACCESSED*** error message is not displayed even after the power is turned on again with the drop-door closed.
- The ***012 DROP DOOR OPEN*** error message is not displayed even after the power is turned on again with the drop-door opened.
- The ***988 DROP DOOR PORT*** error message is displayed
- No error messages appear when the sub-door is opened and closed.

A drop-door open accessed error can be detected even with the power turned off. Reset the error and turn the power on to check that the switch is installed correctly.

Drop Box Switch Pin Assignment

DROP BOX SWITCH PIN ASSIGNMENT		
A1	ISO_+5V	ISO_+5V
A2	iSC_OFF_SLTST_BG	SECURITY SW OFF SLOT-STAND DOOR GND
A3	iSC_ON_SLTST_G	SECURITY SW ON SLOT-STAND DOOR GND
A4	iSC_ON_MTNCE_G	SECURITY SW ON MNTNC DOOR GND
A5	iSC_OFF_MTNCE_BG	SECURITY SW OFF MNTNC DOOR GND
A6	iSNS_MTNCE_G	SENSOR MNTNC DOOR GND
B1	iSC_OFF_SLTST	SECURITY SW OFF SLOT-STAND DOOR
B2	iSC_ON_SLTST	SECURITY SW ON SLOT-STAND DOOR
B3	iSC_ON_MTNCE	SECURITY SW ON MNTNC DOOR
B4	iSC_OFF_MTNCE	SECURITY SW OFF MNTNC DOOR
B5	iSNS_MTNCE	SENSOR MNTNC DOOR
B6	FG	FG

Slot Accounting System Overview

Slot accounting system communication with the video gaming machine takes place with an interface on the backplane board (BCKB-3) in the logic box and settings on the Online System option page in the Konami Maintenance System (K.M.S).

Connections

Under typical conditions, CNB33/Port 1 on BCKB-3 is for fiber optic connection use only. CNB34 and CNB32 are used for serial communications with conventional wiring.

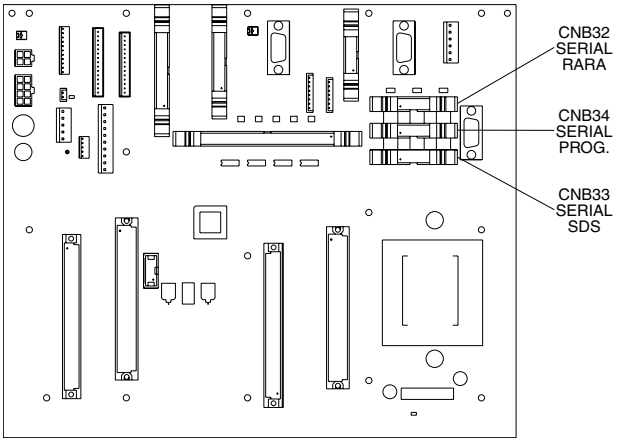

Fiber Optic

When fiber optic communication lines are used, they are first routed to the SAS unit mounted in the top box of the machine. The SAS unit is equipped with two input and two output fiber optic receptacles. It is also equipped with a serial input/output connector and attached wiring, the output of which is connected to CNB33 on the Backplane board (BCKB-3).

SAS Bracket

The SAS components are mounted to a removable bracket installed on the top box. Use the following illustration to remove and install the bracket.

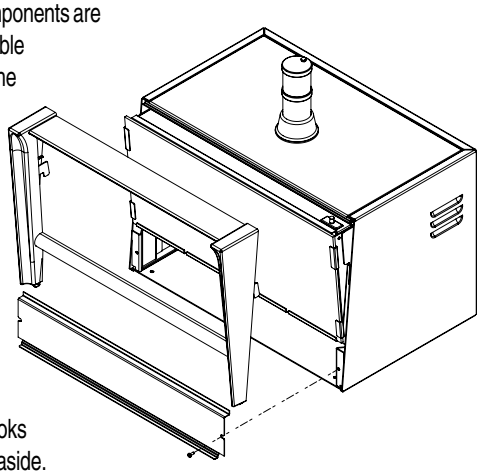

Removal

Turn off machine power. Open the main door. Remove the topbox door by lifting it up until the mounting hooks are released and set aside. Uninstall the SAS bracket by removing the two 6-32 X 3/8 sems screws.

Installation

Install the SAS bracket by reinstalling the two 6-32 X 3/8 sems screws. Install the top box door. Turn on machine power. Close and lock the main door.

 © 2004 KONAMI GAMING

Turning Off the Power Switch

Turn off the power switch before performing maintenance. Since power is supplied to the following units although the power switch is off, the main AC power cord ***MUST*** be unplugged when servicing the machine.

- SAS unit (Slot Account System)

Installation

This chapter describes the procedure for installing the cabinet and the initial settings of the equipment.

- Initialization
- Serial Number
- Opening and Closing the Doors
- How to Change Locks

Initialization

This section describes how to check the version of the cabinet and the optional parts provided. This information will help perform the work from initialization to operation of this machine smoothly. Check the serial number and then the version of the cabinet. Since there may be some cabinets containing optional parts, check if the cabinet has any optional part using the list of the optional parts.

Serial Number and Lot Number

Check the serial number. The following shows the way to check the serial number by using the serial plate or referring to the stamped serial number. Two types of serial number plates are used. The first is for non-C.U.L. approved games (shown below).

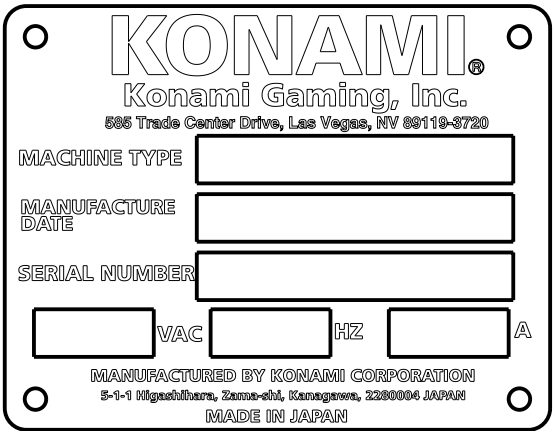

The variation of the non-C.U.L. approved game is the approved version (shown below), which will be placed in the same location on the cabinet. An additional serial number plate will be placed on the top box.

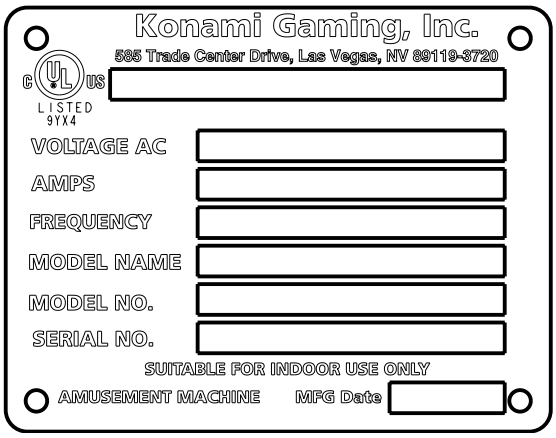

Using The Serial Plate

The serial plate for the cabinet is installed on the right side on the outside of the cabinet.

The serial plate for the top box is installed on the back lower left side of the top box.

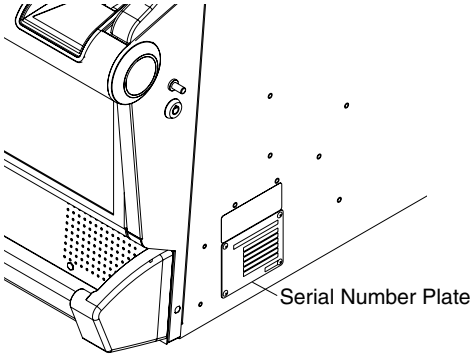

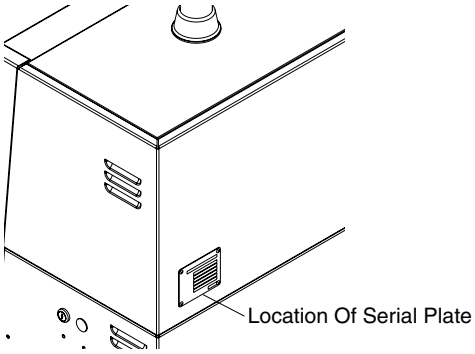

The information displayed on the serial number plate includes:

- **MACHINE TYPE**: Series name of the cabinet (K2V 1.5 for this machine).

- **MANUFACTURE DATE**: Date of manufacture.
- **SERIAL NUMBER**: Cabinet-specific number.
- **VAC, HZ, A**: Usage environment for the cabinet.

Referring To The Stamped Serial Number

The serial number is stamped or engraved on the front inside of the cabinet. This serial number is identical with the serial number found on the serial plate. If you find a different serial number, contact your KGI representative immediately.

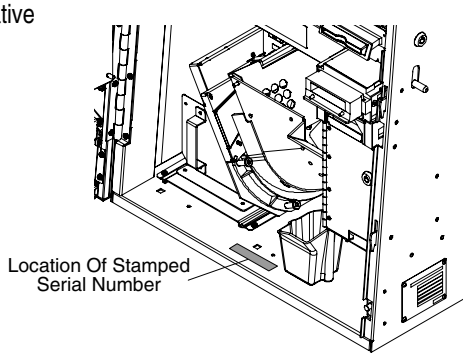

Opening and Closing the Doors

Main Door

To open, insert the key into the cylinder on the right side of the cabinet. Turn the key 90° clockwise. Pull up the main door lever with the key turned. Open the door by pulling the door toward you.

To close, close the door with the main door lever pulled up. Turn the key 90° counter-clockwise. Remove the key from the cylinder.

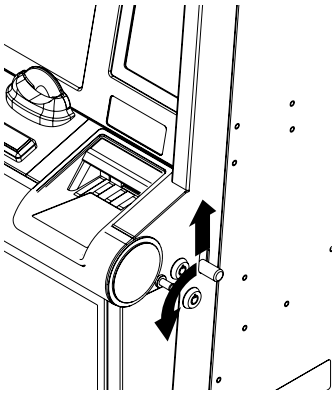

Sub-Door (Belly Door)

To open, insert the sub-door key into the sub-door key cylinder on the right of the main door. Turn the key 90° clockwise. Press the sub-door open button with the key turned. Open the sub-door.

To close, close the door while pressing the sub-door open button with the key turned clockwise. Turn the key 90° counter-clockwise. Remove the key from the cylinder.

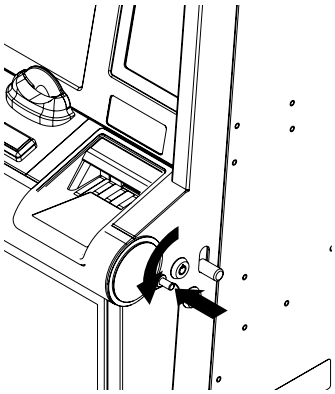

Bill Validator Door (Sub Door Open)

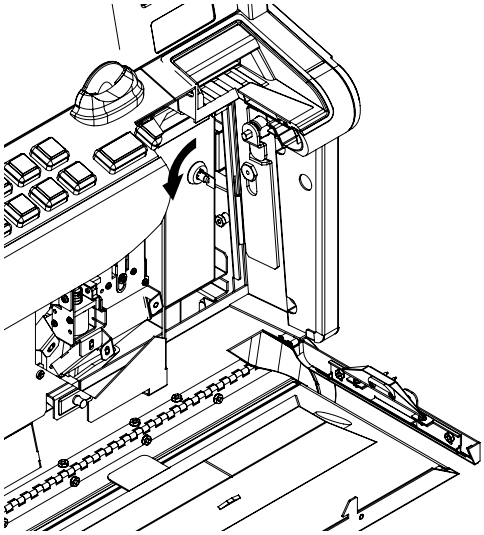

The following describes how to open the bill stacker door with the sub-door opened.

To open, insert the key into the cylinder for bill stacker door key on the bill stacker door. Turn the bill stacker door key 90° counterclockwise. Open the bill stacker door.

To close, close the bill stacker door. Turn the bill stacker door key 90° clockwise. Remove the bill stacker door key from the cylinder.

Bill Validator Door (Main Door Open)

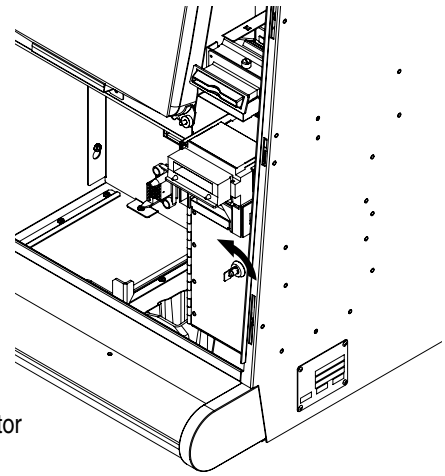

The following describes how to open the bill validator door with the main door opened.

To open, insert the key into the cylinder for bill validator door key on the front of the bill validator door. Turn the key 90° counterclockwise. Open the bill validator door.

To close, close the bill validator door. Turn the key 90° clockwise. Remove the key from the cylinder for bill validator door key.

© 2004 KONAMI GAMING

Top Box (B-Top)

To open, open the main door. Slide the topbox door up and forward until it clears the mounting tabs.

To close, slide the topbox door onto the mounting tabs and slide down as far as it will go. Close and lock the main door.

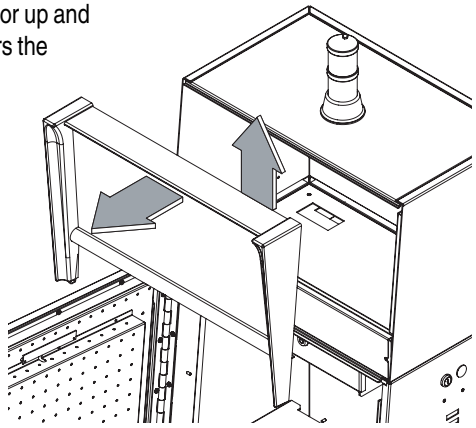

Logic Door

The following describes how to open the logic door with the main door open.

To open insert the logic door key into the cylinder on the front of the logic unit. Turn the key 90° counterclockwise. Open the logic door by pulling the logic door toward you and up to clear the mounting tabs.

To close, insert the logic door tabs into the slots and pivot into the locking position. Turn the logic door key 90° clockwise. Remove the logic door key from the cylinder.

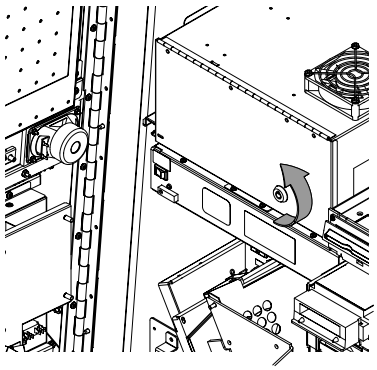

Changing Locks

Lock Dimensions

The following shows the standard lock dimensions.

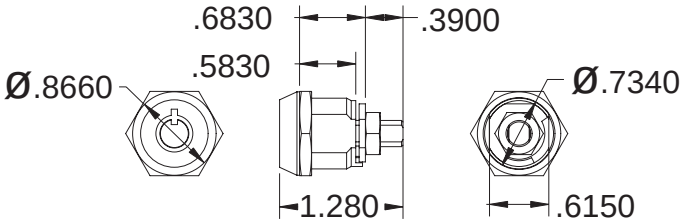

Lock Hardware

The following shows the standard lock hardware.

LARGE	SMALL
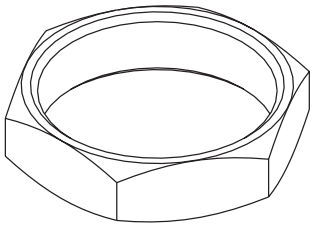	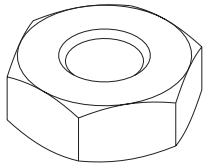
3/4-28 UNF	9/32-28 UNF

Lock Cams

The following shows the standard lock cams required for this machine.

LOCKING CAMS		
Part #	**Description**	
190020	CAM,LOCK,MAIN DOOR	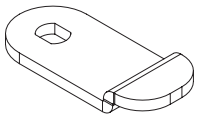
190048	PLATE,LOCK,CB NT	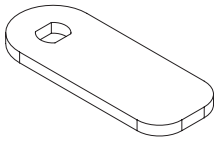
190306	CAM,DOOR,BV	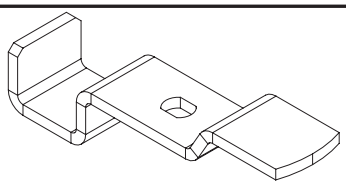
190713	CAM,LOCK,MAIN & BELLY DOOR	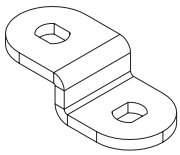
190020	CAM,LOCK,CPU DOOR	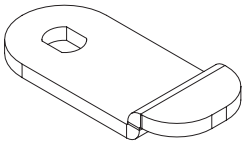

© 2004 KONAMI GAMING

Main Door Lock

NOTE : Locks are supplied for shipping purposes only. It is recommended that all locks be replaced with owner/operator approved and secured lock.

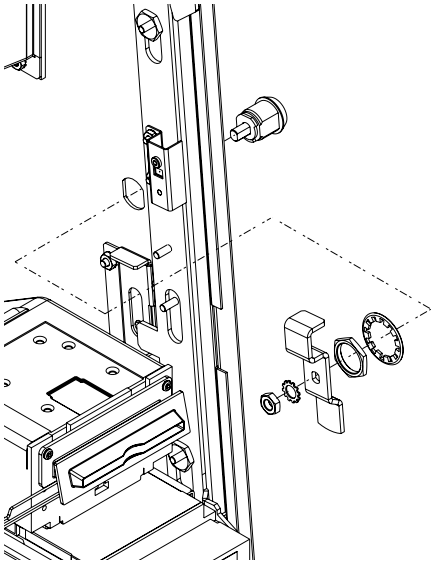

Open the main door. Remove the 9/32-28 UNF nut. Remove the cam. Remove the 3/4-28 UNF nut from the lock. Remove the key cylinder from outside the cabinet. Install a new key cylinder. Turn the key 90° clockwise to open the main door, then return it to the original position.

Make sure that the lock is installed properly by opening and closing the door.

If the following problems exist before turning on the power, check that the key works properly for the installed lock.

- The door will not open and close easily.
- The latch does not engage easily.
- The key cannot be removed or turned.

If the ***010 MAIN DOOR OPEN*** message appears after turning on the power, make sure that the above procedure was performed properly.

The probable causes of the error are:

- The lock is not installed properly.
- The main door switch is not depressed completely.

If the ***030 MAIN DOOR ACCESSED*** message appears after turning on the power, turn the reset-key switch.

Go to **DIAGNOSTIC DOOR** in the **K.M.S.** to check main door switch and sensor.

Logic Door Lock

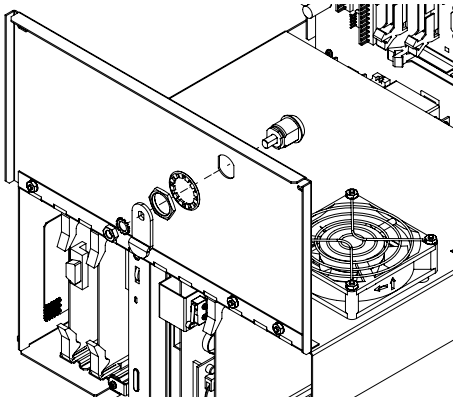

Open the main door. Open the logic door. Remove the 9/32-28 UNF nut from the lock. Remove the cam. Remove the 3/4-28 UNF nut from the lock. Remove the key cylinder from outside the logic door. Install a new key cylinder. Turn the key 90° counterclockwise to open the logic door, then return it to the original position. Make sure that the lock is installed properly by opening and closing the door.

If the following problem arises before turning on the power, check that the above procedure was performed properly.

- The door will not open and close easily.
- The key cannot be removed or turned.

If the ***012 LOGIC DOOR OPEN*** message appears after turning on the power, check that the above procedure was performed properly.

The probable causes of the error are:

- The lock is not installed properly.
- The logic door switch is not depressed completely.

If the ***032 LOGIC DOOR ACCESSED*** message appears after turning on the power, turn the reset-key switch.

Go to **DIAGNOSTIC DOOR** in the **K.M.S.** to check logic door switch.

Sub-Door Lock

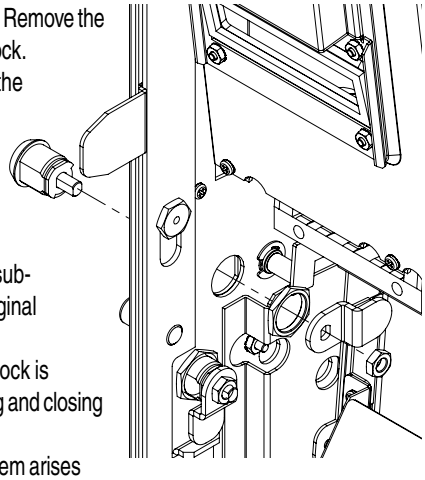

Open the main door. Remove the 9/32-28 UNF nut from the lock. Remove the cam. Remove the 3/4-28 UNF nut from the lock. Remove the key cylinder from outside the main door. Install a new key cylinder. Turn the key 90 ° clockwise to open the sub-door, then return it to the original position.

Make sure that the lock is installed properly by opening and closing the door.

If the following problem arises before turning on the power, check that the above procedure was performed properly.

- The door will not open and close easily.
- The door release does not engage easily.
- The key cannot be removed or turned.

If the ***013 SUB DOOR OPEN*** message appears after turning on the power, check that the above procedure was performed properly.

The probable causes of the error are:

- The lock is not installed properly.
- The sub door switch is not depressed completely.

If the ***033 SUB DOOR ACCESSED*** message appears after turning on the power, turn the reset-key switch.

Go to **DIAGNOSTIC DOOR** in the **K.M.S.** to check sub door switch.

NOTE: Remove the spacer for a short lock. Retain the spacer and other small parts for future use if not required for this application.

© 2004 KONAMI GAMING

Bill Validator Door Lock

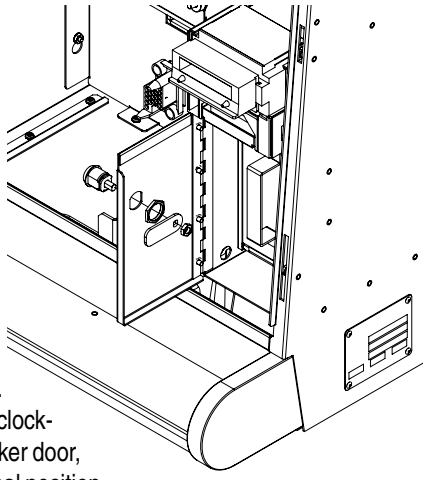

Open the main door. Open the bill validator door. Remove the 9/32-28 UNF nut from the back of the bill validator door. Remove the cam. Remove the 3/4-28 UNF nut from the lock. Pull out the bill validator door lock from the bill validator door. Install a new key cylinder. Turn the key 90° counterclockwise to open the bill stacker door, then return it to the original position.

Make sure that the lock is installed properly by opening and closing the door.

If the following problem arises before turning on the power, check that the above procedure was performed properly.

- The door will not open and close easily.
- The key cannot be removed or turned.

If the ***014 BILL DOOR OPEN*** message appears after turning on the power, check that the above procedure was performed properly.

The probable causes of the error are:

- The lock is not installed properly.
- The bill validator door switch is not depressed completely.

If the ***034 BILL DOOR ACCESSED*** message appears after turning on the power, turn the reset-key switch.

Go to **DIAGNOSTIC DOOR** in the **K.M.S.** to bill door switch.

Top Box Door

The top box door is secured by the main door (in the locked position). If the ***015 TOP BOX DOOR OPEN*** message appears after turning on the power, check that the top box door is fully secured by the main door and the top box door switch is depressed completely.

Go to **DIAGNOSTIC DOOR** in the **K.M.S.** to top box door switch.

Setting the Hopper Level Probe

The Konami hopper is equipped with a level probe to measure the number of coins in the hopper bowl. When a desired amount is reached, the diverter actuates and directs the coins to the drop bucket. Changing the position of the level probe determines the amount of coins in the hopper. By moving the probe to a lower location, less coins will be added to the hopper. See the illustrations below to change the level probe position.

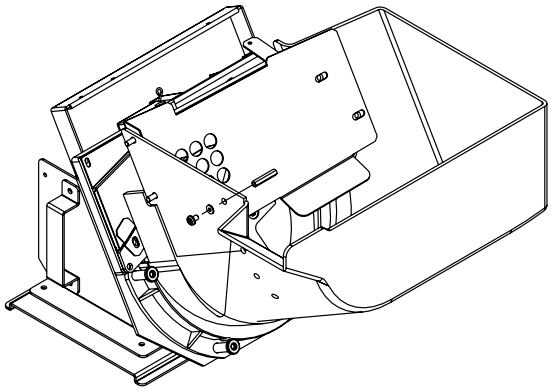

Highest Level Probe Setting

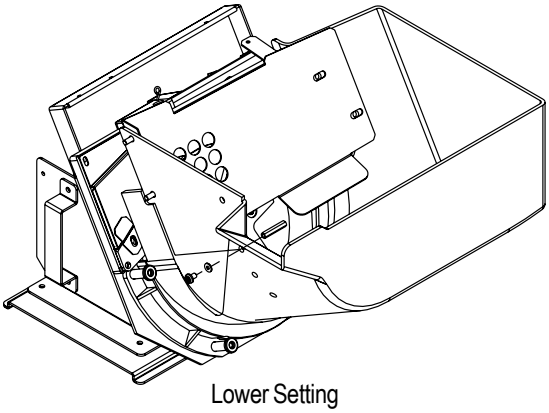

Lower Setting

Coin Acceptor Sample Coin

The coin acceptor validates and either accepts or rejects coins or tokens inserted through the coin head. Insert a high quality sample coin or tokens (matching the machine's denomination) into the sample coin sliding holder on the coin acceptor. Insert a number of coins or token through the coin head and verify the coin acceptor properly functions. If an excessive number of coins are rejected, the acceptor may need adjusting (see Module 5; Preventative Maintenance).

Option the Bill Acceptor (Factory Preset)

The bill acceptor validates, either accepting or rejecting bills inserted into the bill validator module (bill head). Accepted bills are transported to the cash cassette, and an appropriate number of credits register on the credit meter. For example, an accepted U.S. $1.00 bill shows as 4 credits on a 25¢ machine. Rejected bills are returned to the Player. Remove the bill validator module (refer to the Module 3; Assemblies, Parts & Hardware). Mars DIP switches are located along the left side of the unit. WBA DIP switches are along the RIGHT side of the unit. Set Mars Dips to ON or WBA DIPS to OFF to accept desired bills.

Startup

Check the following items before connecting the AC plug to a receptacle.

Inspection of the cabinet

- Check that all the units are plugged in firmly.
- Check that all the connectors are connected.
- Check that the AC cord is not damaged.
- Check that the power switch is turned off.
- Check that fuses are not blown.

Inspection of the use environment

- Check that the power supply meets the specification for the cabinet.
- Check that the AC cord is not strained (do not bend the AC cord at a sharp angle, coil it or put a heavy weight on it).
- Check that there is nothing containing water near the power supply.

Inspection after connecting the AC plug to the receptacle

- Check that a smell of smoke is not present.
- Check that no sparks, smoke or flame are produced.
- Check that the AC cord does not get too hot.

Turning On the Power Switch

When an Operator performs the following, the all reset (RAM clear) procedure is required. When the game initializes, the Operator will be prompted to insert a level 0 EL-Key.

- When a new EPROM is set in the MCTB and started for the first time.
- When the EPROM is changed to a different version.
- When the value of the denomination is changed.

Clearing the Backup Memory

All Reset clears the contents of the backup memory such as the credit, software meter, and game log and initializes the setting of the machine.

EL Key (I-Button)

The EL Key, a 16mm computer chip in an armored stainless steel case, is located on the MCTB and is used as a clear chip, set chip and for software authentication. The EL Key is a 1,152-bit secure read/write nonvolatile memory partitioned into three 384-bit blocks capable of data retention for over 10 years.

EL Key Levels

The EL Key is available in one level (0 clear and set chip). The EL Key is programmed for a specific game and are not interchangeable between different game titles. The different levels are:

- **Level 0** (Clear and set chip) – Used to perform a safe store clear (RAM clear) and make and set all initial machine settings.

Setting Undefined Options

Since the optional values are stored in the EEPROM, the optional values can be left intact even though you have performed All Reset. When you set the EPROM in the MCTB and start the machine for the first time, the optional values are not defined.

Procedure for All Reset

- Turn power OFF.
- Install Level 0 EL Key on the Main Control Board.
- Turn power ON.
- When prompted, press the ***SPIN*** button to start the All Reset procedure.
- Configure the machine by following the screen by screen instructions.
- When prompted, with the power ON (or OFF after prompt), remove the Level 0 EL Key then turn the reset keyswitch to reboot the machine and lock in the new settings.

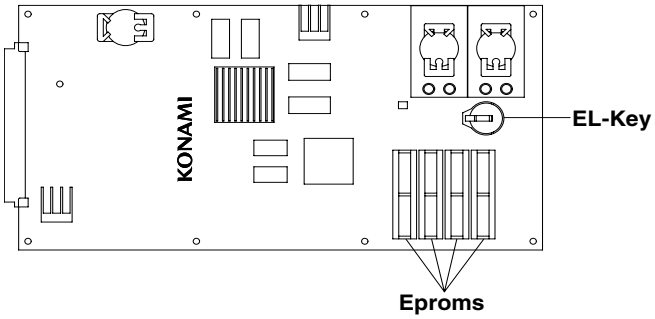

Setting Options

The screen to set the date/time and options appears after the backup memory is cleared. Set the options as necessary.

Restart the Machine by Changing the EL Key

After setting all the options, the following messages appear.
All Reset procedure was completed.
Remove the Level 0 EL Key.
Turn Reset Key Switch to reset the machine.
Power the machine down and back on to lock in the option values.

Returning from the KMS

The KMS screen appears after the board is checked. Turn the Reset key to return the screen to the game screen.

Recovering from Error

The ***EL KEY CHANGED*** error message appears. Turn the Reset key to recover from the error.

If any other error message appears, eliminate its cause and recover from the error.

Starting up (normally)

Open the main door to turn on the power switch, then close the main door. The self-check screen appears. When no error is found in all the items, the game screen appears.

Operation

Game Screen

Game screen is composed of three areas, which are (A), (B) and (C).

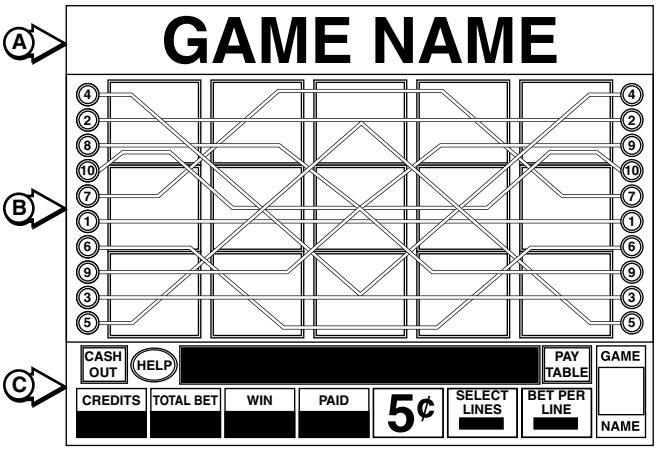

(A) SUB-GAME AREA

The sub-game area displays the game title and the featured game image.

(B) GAME AREA

The game area displays image that corresponds to game type. For example, Reels and Play lines are displayed in the Slot game. The cards and pay table is displayed in the Poker or Black Jack game. During the featured game, game area is changed into the feature's image.

(C) DASHBOARD

The dashboard displays the game status information, attendant message, game instruction, denomination sign, and other meters.

© 2004 KONAMI GAMING

Help and Pay Table

NOTE : Help and paytable screens are game specific and will vary according to the installed game. Screens displayed are for example only and may differ from the currently installed game.

The following is an example, HELP (10-Line Game) and PAY TABLE (DAYS OFF). Screen 1 of 6 displays the line configuration for this game.

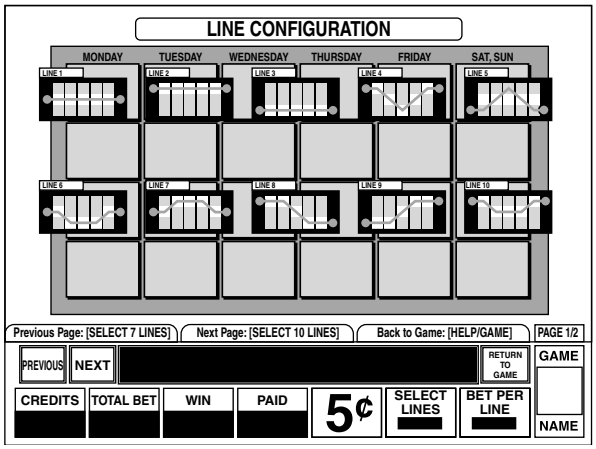

Screen 2 of 6 displays the button instructions for this game.

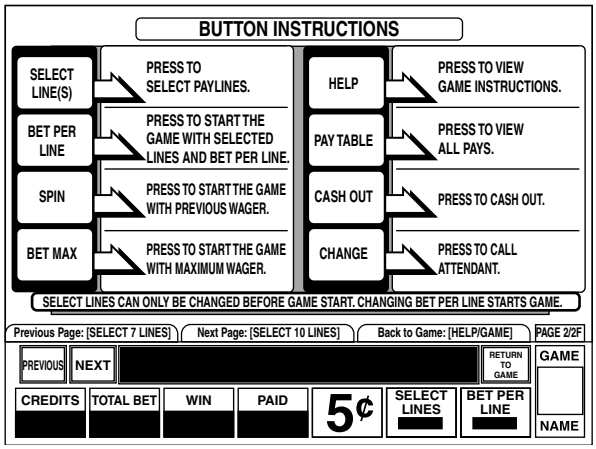

Screen 3 of six displays the scatter pay awards.

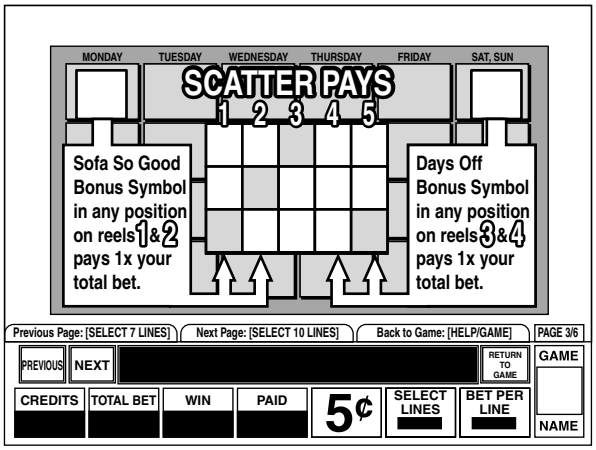

Help and Paytable (cont.)

Screen 4 of 6 displays the sofa so good bonus awards.

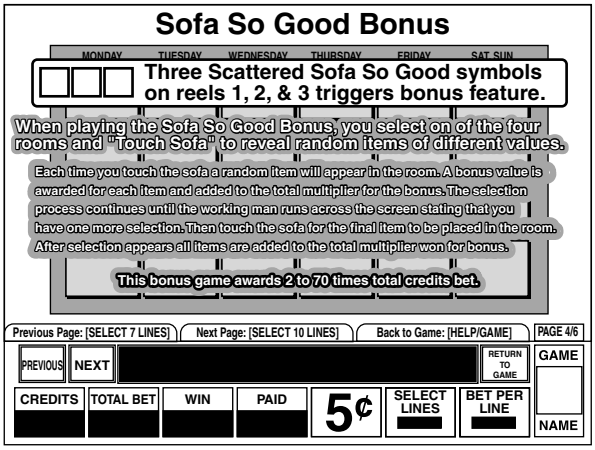

Screen 5 of 6 displays the days off bonus awards.

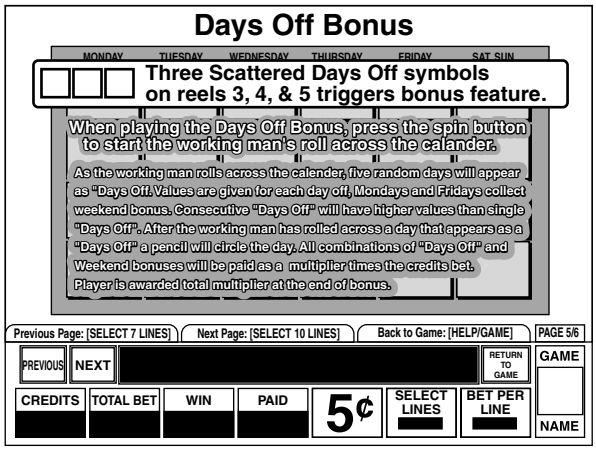

Screen 6 of 6 displays the days off award schedule

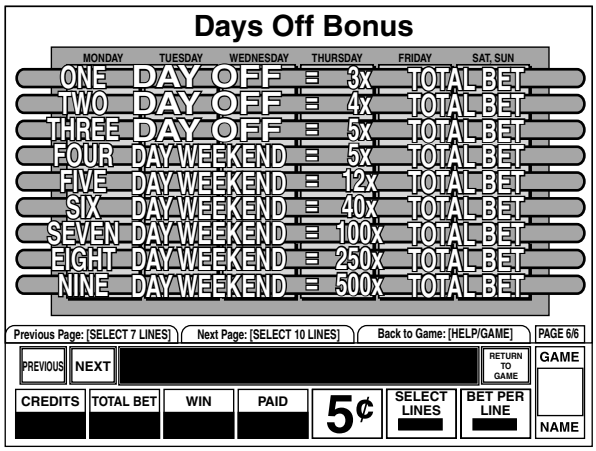

Collecting Coins

Normally, the coin hopper holds the inserted coins. When the coin hopper becomes full of coins, the diverter moves coins into the drop box. Since no error message will appear when the drop box becomes full of coins, coins should be collected periodically.

Player/Operator Interface

Use the following illustration to identify the player/operator interface items used to play the game.

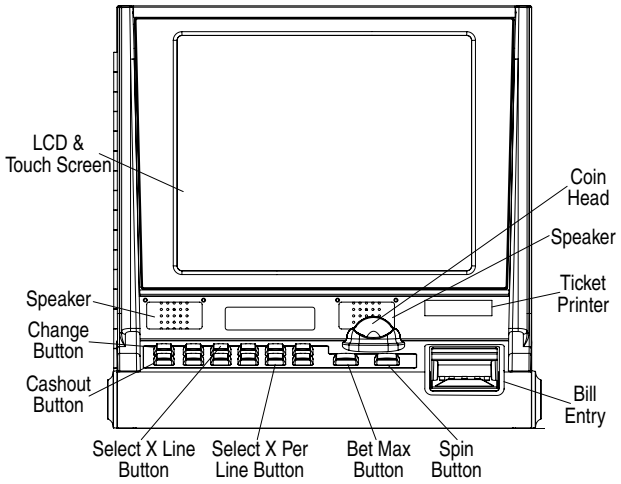

Change Button

The change button is used to illuminate the upper signal tower light with a steady flash, indicating to the operator that change is required at the machine.

Cashout Button

The cashout button is used by the player to retrieve unused credits from the machine. When pressed, the hopper activates dropping coins into the coin bowl, triggering an attendant pay, printing a ticket or a combination of events.

Select Line Buttons

The select line(s) button allows the player to choose the number of lines played.

Bet X Per Line Buttons

The Bet X Per line buttons allow the player to select the number of credits played for each of the selected lines.

Bet Max Button

The bet max button wagers the maximum number of credits for each time it is pressed. A credit equals the current denomination X 1 (if the machine is optioned with a denomination of 50¢, and the maximum number of coins is 45, the bet max value would be $22.50. When the bet max button is pressed, the reels spin automatically.

Spin Button

The spin button can act as a repeat bet button. After the number of lines are selected, the credits wagered per line activates the game. The spin button then activates the next game.

Bill Validator (Bill Entry)

Accepts paper currency and converts it into credits according to the denomination of the machine. If a $20.00 bill is inserted, and the denomination of the machine is 5¢, 400 credits will be added to the credit meter.

Coin Head

Location where coins can be inserted into the machine.

Ticket Printer

The ticket printer is used to dispense tickets that reflect the amount of credits remaining on the machine that can be cashed for their monetary value, or in some cases, can be inserted into another machine to add credits and enable play.

LCD Touchscreen

The LCD screen is used to display animations, bonus games and bonus pays to the player. It is also used to access the K.M.S. (Konami Maintenance System) to display game information, audit information, log files, game recall files, event info files and system info files. It is also used to display diagnostic screens and game test screens.

© 2004 KONAMI GAMING

Refilling Hopper

When the coin hopper becomes empty of coins, the 120 HOPPER EMPTY OR JAM message appears. This message will suspend the game until the hopper is refilled with coins according to the following procedure.

Open the main door. Check if the coin hopper contains coins. If the coin hopper contains coins, there is a possibility of a JAM. If jammed, clear the jam and reset the game. If the hopper is empty, refill with coins. Make sure not to drop coins inside the cabinet when refilling the hopper. Close the main door and turn the reset key to recover from the error.

Collecting Bills

When the bill stacker becomes full of bills, the 224 BILL STACKER FULL message appears. This suspends the game until the bills are collected according to the following procedure. Bills should collected periodically before the bill stacker becomes full.

Open the sub door. Open the bill stacker door.

Pull down the lever installed to the bill stacker handle to unlock and pull out the bill stacker. Unlock the locks (2 places) on the back of the bill stacker at the same time and remove the bill. Push the bill stacker back to the bill validator unit. Close the bill stacker door and sub door. Turn the reset key to recover from the error.

Collecting Coins

Normally, the coin hopper holds the inserted coins. When the coin hopper becomes full of coins, the diverter moves coins into the drop box. Since no message will appear when the drop box becomes full of coins, coins should be collected periodically.

Audit Mode

How to Enter and Exit Audit Mode

In this machine, the audit mode is called the "KONAMI Maintenance System" (abbreviated as K.M.S).

The K.M.S screen will automatically return to the game screen in 15 seconds if no operation is performed and the following conditions exist.

- The main door is closed.
- The Audit Key Switch is not turned on.
- No button is pressed.

KONAMI Maintenance System (K.M.S) Main Menu

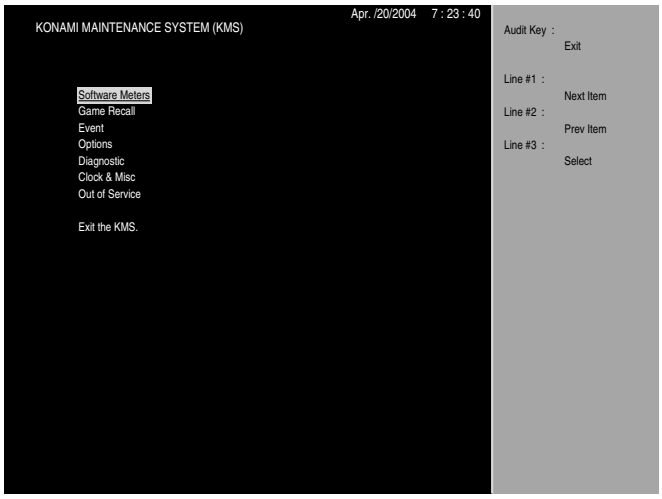

The audit key exits the K.M.S., the ***CHANGE*** button returns to the previous menu, the ***SELECT 1 LINE*** button moves to the next page and the ***SELECT 2 LINES*** button returns to the previous page.

As the ***SELECT X LINE*** configuration is game dependant, use the following illustration to determine which button corresponds to each K.M.S. menu pick.

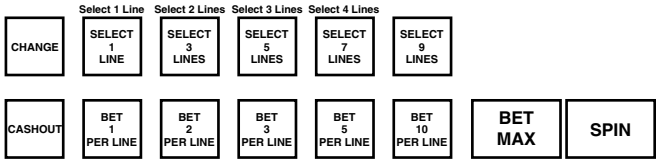

Common Operation switches

The following switch operation is the same as on each K.M.S screen (excepting a few menus).

Switch Position Audit Returns to the game screen.

Software Meters

Various Software Meters can be checked. Software meters are accessed by turning the reset keyswitch. The audit key exits the K.M.S., the ***CHANGE*** button returns to the previous menu, the ***SELECT 1 LINE*** button moves the cursor to the next menu, the ***SELECT 2 LINES*** button moves the cursor to the previous menu and the ***SELECT 3 LINE*** button enters the current selection.

MENU DESCRIPTION	
Menu	**Description**
Software Meters	Checks various Software Meters.
Game Recall	Checks the game history.
Event	Checks the record concerned with Event.
Options	Checks and changes each Option setting.
Diagnostic	Diagnoses various devices installed on EGM.
Clock & Misc.	Checks and changes the date and time of the internal clock.
Out of Service	Displays "Out of Service" message and locks the machine.
Exit the KMS	Returns to the game screen.

Press the ***SELECT 3 LINES*** button to enter the selection. The following screen displays.

Software Meters-Audit Meters- General - Page 1/20

Use to access the various Software Meters. Software meters are accessed by turning the reset keyswitch. The audit key exits the K.M.S., the ***CHANGE*** button returns to the previous menu, the ***SELECT 1 LINE*** button moves to the next page and the ***SELECT 2 LINES*** button returns to the previous page.

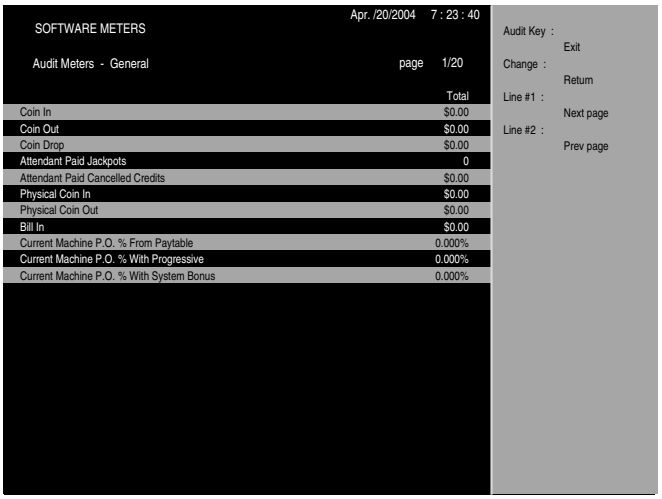

AUDIT METERS-GENERAL	
Item	**Description**
COIN IN	Total amount of credits bet from credit meter or coins inserted. This meter includes credits bet to Residual credit removal game.
COIN OUT	Total amount of credits won from paytable. This meter includes won amount of Residual credit removal game.
COIN DROP	Total number of coins sorted into the cash box.
Attendant Paid Jackpots	Total amount paid by attendant from single win. This meter doesn't include any progressive wins and external system bonus.
Attendant Paid Cancelled Credits	Total amount paid by attendant in cash-out.
Physical Coin In	Number of coins accepted by Coin Acceptor.
Physical Coin Out	Total number of coins paid from the Coin Hopper.
Bill In	Total amount of bill accepted.
Current Machine P.O. % From Paytable	Current machine payout percentage from paytable.
Current Machine P.O. % With Progressive	Current machine payout percentage including Progressives wins.
Current Machine P.O. % With System Bonus	Current machine payout percentage including progressive wins and external system bonus.

Press the ***SELECT 1 LINE*** button to go to the next page. The following screen displays.

Software Meters-Audit Meters-Detail Page 2/20

Displays the accounting information and bill acceptance data. The audit key exits the K.M.S., the ***CHANGE*** button returns to the previous menu, the ***SELECT 1 LINE*** button moves to the next page and the ***SELECT 2 LINES*** button returns to the previous page.

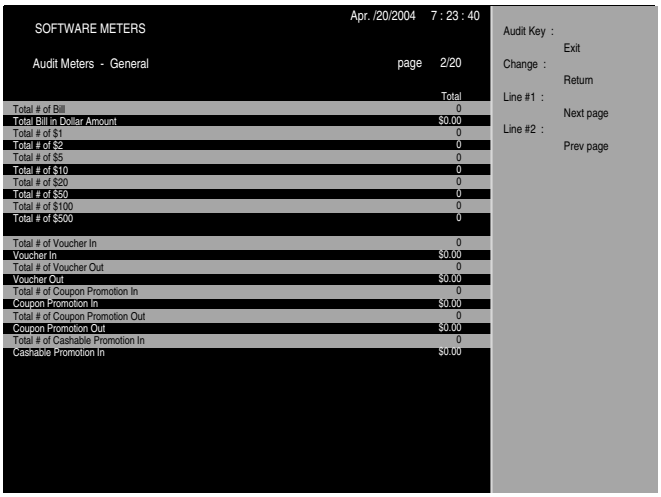

AUDIT METERS-DETAIL	
Item	**Description**
Total # of Bill	Total number of bills received.
Total Bill in Dollar Amount	Total amount in dollars by bill acceptance.
Total # of $1	Total number of $1 bills accepted.
Total # of $2	Total number of $2 bills accepted.
Total # of $5	Total number of $5 bills accepted.
Total # of $10	Total number of $10 bills accepted.
Total # of $20	Total number of $20 bills accepted.
Total # of $50	Total number of $50 bills accepted.
Total # of $100	Total number of $100 bills accepted.
Total # of $500	Total number of $500 bills accepted.
Total # of Voucher In	Total number of Cash Tickets accepted.
Voucher In	Total dollar amount of Cash Tickets accepted.
Total # of Voucher Out	Total number of Cash Tickets printed out.
Voucher Out	Total amount of Cash Tickets printed out.
Total # of Coupon Promotion In	Total number of Promotional Coupons accepted.
Coupon Promotion In	Total amount of Coupons accepted.
Total # of Coupon Promotion Out	Total number of Promotional Coupons printed out.
Coupon Promotion Out	Total amount of Promotional Coupons printed out.
Total # of Cashable Promotion In	Total number of Cashable Promotional Tickets accepted.
Cashable Promotion In	Total amount of Cashable Promotional Tickets accepted.

Software Meters-Audit Meters-Detail Page 3/20

Displays the accounting information, hopper, cashable and non-cashable credit/promotion play and mini-game data. The audit key exits the K.M.S., the ***CHANGE*** button returns to the previous menu, the ***SELECT 1 LINE*** button moves to the next page and the ***SELECT 2 LINES*** button returns to the previous page.

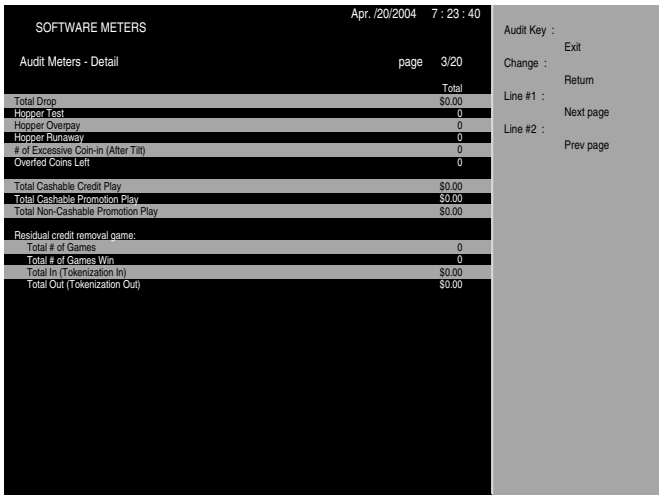

AUDIT METERS-DETAIL	
Item	**Description**
Total Drop	Total amount of following amount: coins dropped into the cash box, bills accepted, any kind of vouchers accepted, any kind of cash or promotional credits transferred in.
Hopper Test	Total number of coins paid out in Hopper test mode.
Hopper Overpay	Total number of extra coins paid in cash-out.
Hopper Runaway	Total number of coins paid out in non-cash out mode.
# of Excessive Coin-in (After Tilt)	Total number of extra coins in condition where coin accepted inhibited accepting coins.
Overfed Coins Left	Total numbers of coins currently held that were inserted after game start.
Total Cashable Credit Play	Total amount of credits played with cash credits.
Total Cashable Promotion Play	Total amount of credits played with cashable promotional credits.
Total Non-Cashable Promotion Play	Total amount of credits played with non-cashable promotional credits.
RESIDUAL CREDIT REMOVAL GAME	
Total # of Games	Total number of games played of Residual credit removal game.
Total # of Game Win	Total number of games won of Residual credit removal game.
Total In (Tokenization In)	Total amount of credits bet to Residual credit removal game.
Total Out (Tokenization Out)	Total amount of credits won from Residual credit removal game.

© 2004 KONAMI GAMING

Software Meters-Audit Meters-Detail Page 4/20

Displays the game information and jackpot data. The audit key exits the K.M.S., the ***CHANGE*** button returns to the previous menu, the ***SELECT 1 LINE*** button moves to the next page and the ***SELECT 2 LINES*** button returns to the previous page.

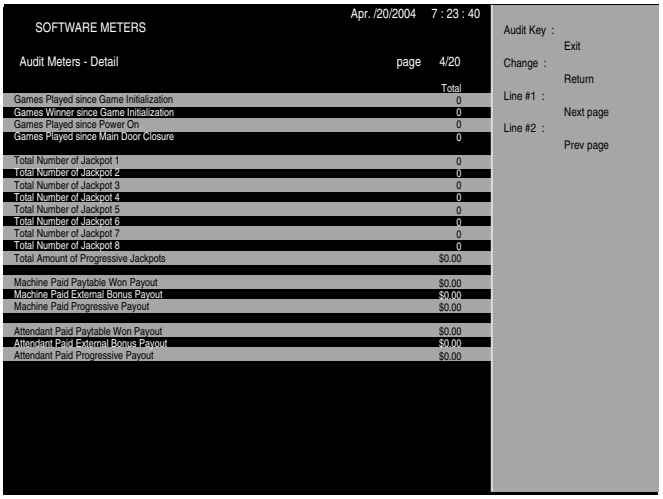

AUDIT METERS-DETAIL	
Item	**Description**
Games Played since game initialization	Total number of games played since game initialization.
Games Winner since game initialization	Total number of games won since game initialization..
Games Played since Power On	Total number of games played since last power on.
Games Played since Main Door Closure	Total number of games played since last main door closure.
Total Number of Jackpot 1	Total number of occurrences of Progressive Jackpot 1.
Total Number of Jackpot 2	Total number of occurrences of Progressive Jackpot 2.
Total Number of Jackpot 3	Total number of occurrences of Progressive Jackpot 3.
Total Number of Jackpot 4	Total number of occurrences of Progressive Jackpot 4.
Total Number of Jackpot 5	Total number of occurrences of Progressive Jackpot 5.
Total Number of Jackpot 6	Total number of occurrences of Progressive Jackpot 6.
Total Number of Jackpot 7	Total number of occurrences of Progressive Jackpot 7.
Total Number of Jackpot 8	Total number of occurrences of Progressive Jackpot 8.
Total Amount of Progressive Jackpots	Total Dollar amount of all progressive jackpots.
Machine Paid Paytable Won Payout	Total amount of winnings the machine paid that came from paytable.
Machine Paid External Bonus Payout	Total amount of external system bonus the machine paid.

AUDIT METERS-DETAIL	
Item	**Description**
Machine Paid Progressive Payout	Total amount of progressive won the machine paid.
Attendant Paid Paytable Won Payout	Total amount of winnings attendant paid which came from paytable.
Attendant Paid External Bonus Payout	Total amount of external system bonus attendant paid.
Attendant Paid Progressive Payout	Total amount of progressive winnings attendant paid.

Software Meters-Audit Meters-Detail Page 5/20

Displays the bill data, voucher data and coupon data. The audit key exits the K.M.S., the ***CHANGE*** button returns to the previous menu, the ***SELECT 1 LINE*** button moves to the next page and the ***SELECT 2 LINES*** button returns to the previous page.

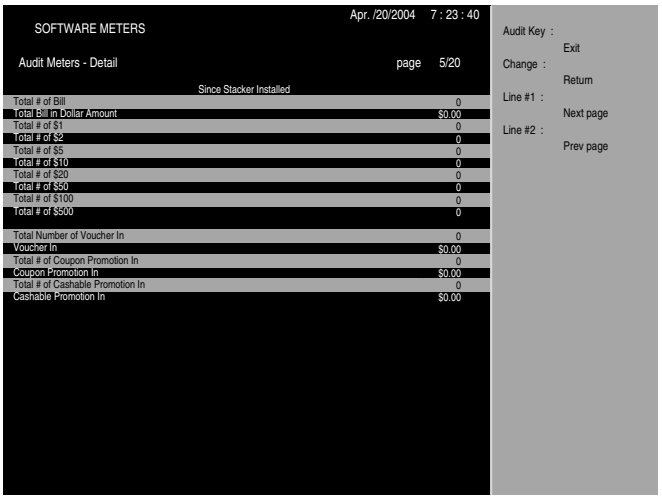

AUDIT METERS-DETAIL	
Item	**Description**
Total # of Bill	Total number of bills received.
Total Bill in Dollar Amount	Total amount in dollars by bill acceptance.
Total # of $1	Total number of $1 bills accepted.
Total # of $2	Total number of $2 bills accepted.
Total # of $5	Total number of $5 bills accepted.
Total # of $10	Total number of $10 bills accepted.
Total # of $20	Total number of $20 bills accepted.
Total # of $50	Total number of $50 bills accepted.
Total # of $100	Total number of $100 bills accepted.
Total # of $500	Total number of $500 bills accepted.
Total # of Voucher In	Total number of Cash Tickets accepted.
Voucher In	Total dollar amount of Cash Tickets accepted.
Total # of Voucher Out	Total number of Cash Tickets printed out.
Voucher Out	Total amount of Cash Tickets printed out.
Total # of Coupon Promotion In	Total number of Promotional Coupons accepted.
Coupon Promotion In	Total amount of Coupons accepted.
Total # of Coupon Promotion Out	Total number of Promotional Coupons printed out.
Coupon Promotion Out	Total amount of Promotional Coupons printed out.
Total # of Cashable Promotion In	Total number of Cashable Promotional Tickets accepted.
Cashable Promotion In	Total amount of Cashable Promotional Tickets accepted.

Software Meters-Audit Meters-Detail Page 6/20

Displays the accounting information EFT data. The audit key exits the K.M.S., the ***CHANGE*** button returns to the previous menu, the ***SELECT 1 LINE*** button moves to the next page and the ***SELECT 2 LINES*** button returns to the previous page.

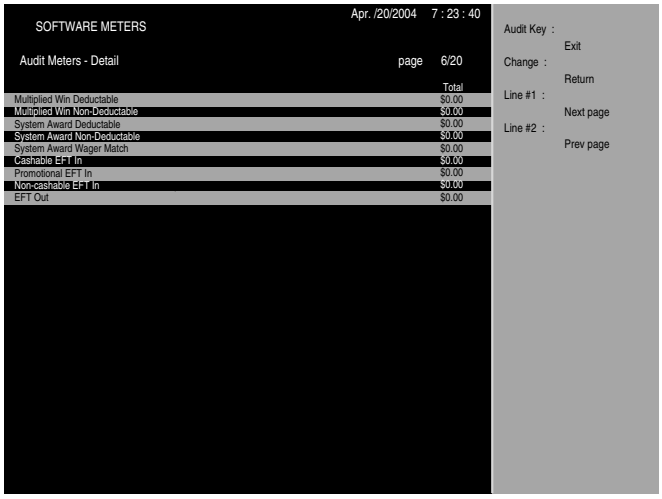

AUDIT METERS-DETAIL	
Item	**Description**
Multiplied Win Deductible	Total amount of credits deductible bonus.
Multiplied Win Non-Deductible	Total amount of credits non-deductible bonus.
System Award Deductible	Total amount of credits deductible System Award.
System Award Non-Deductible	Total amount of credits non-deductible System Award.
System Award Wager Match	Total amount of credits Wager Match System Award.
Cashable EFT In	Total amount of credits cashable EFT.
Promotional EFT In	Total amount of credits promotional EFT.
Non-Cashable EFT In	Total amount of credits non-cashable EFT.
EFT Out	Total amount of credits forced cashout by host.

Software Meters-Audit Meters-Detail Page 7/20

Displays the EFT data. The audit key exits the K.M.S., the ***CHANGE*** button returns to the previous menu, the ***SELECT 1 LINE*** button moves to the next page and the ***SELECT 2 LINES*** button returns to the previous page.

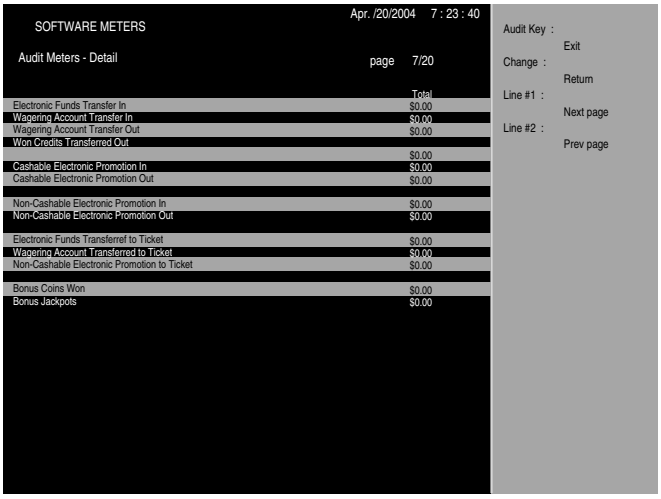

AUDIT METERS-DETAIL	
Item	**Description**
Electronic Funds Transfer In	Total amount of debit credits transferred in.
Wagering Account Transfer In	Total amount of In-House credits transferred in.
Wagering Account Transfer Out	Total amount of In-House credits transferred out.
Won Credits Transferred Out	Total amount of won credits transferred out.
Cashable Electronic Promotion In	Total amount of In-House cashable electronic promotional credits in.
Cashable Electronic Promotion Out	Total amount of In-House cashable electronic promotional credits out.
Non-Cashable Electronic Promotion In	Total amount of In-House non-cashable electronic promotional credits in.
Non-Cashable Electronic Promotion Out	Total amount of In-House non-cashable electronic promotional credits out.
Electronic Funds Transfer to Ticket	Total amount of debit credits transferred in and paid out as a cash ticket directly.
Wagering Account Transfer to Ticket	Total amount of In-House credits transferred in and paid out as a cash ticket directly.
Non-Cashable Electronic Promotion to Ticket	Total amount of In-House non-cashable promotional credits transferred in and paid out as a cash ticket directly.
Bonus Coins Won	Total amount of external system bonus transferred in through AFT transfers and paid by the machine.
Bonus Jackpots	Total amount of external system bonus transferred in through AFT transfers and paid by attendant.

Software Meters-Bill Meters-Page 8/20

Displays the history of bills and vouchers rejected use that occurred recently (date & time and amount of the last 16 bills accepted). The audit key exits the K.M.S., the ***CHANGE*** button returns to the previous menu, the ***SELECT 1 LINE*** button moves to the next page and the ***SELECT 2 LINES*** button returns to the previous page.

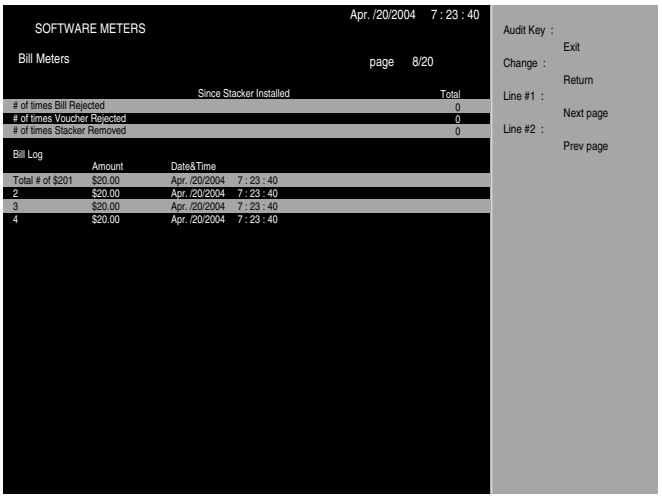

BILL METERS	
Item	**Description**
# of times Bill Rejected	Number of times Bill Rejected since stacker installed.
# of times Voucher Rejected	Number of times Voucher Rejected since stacker installed.
# of times Stacker Removed	Number of times Stacker Removed since stacker installed.
Last 16 Bills and Vouchers Validated	Displays amount, date and time and validation number for the last 16 bill and vouchers validated.

Software Meters-Voucher Log-Page 9/20

Displays the voucher acceptance history (date & time and amount of the latest 35 vouchers accepted). The audit key exits the K.M.S., the ***CHANGE*** button returns to the previous menu, the ***SELECT 1 LINE*** button moves to the next page and the ***SELECT 2 LINES*** button returns to the previous page.

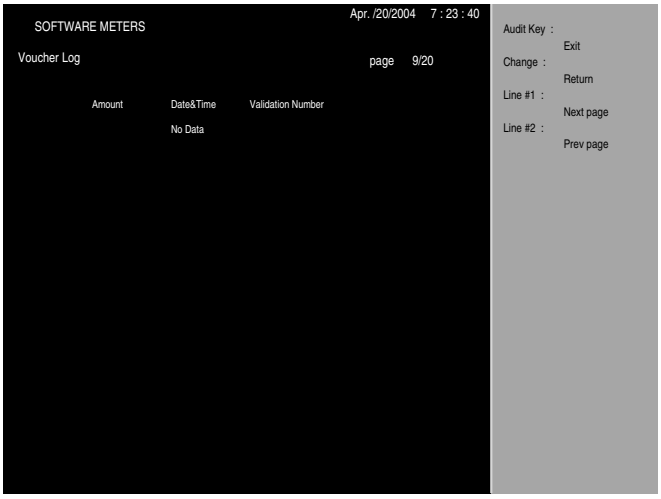

VOUCHER LOG	
Item	**Description**
Date & Time	Accepted date & time.
Amount	Voucher Amount.
Validation Number	Validation Number.

Software Meters-Cashout Log-Page 10/20

Displays the history of cashout that occurred recently (cashout date & time, $ amount paid of the last 16 cashouts). The audit key exits the K.M.S., the ***CHANGE*** button returns to the previous menu, the ***SELECT 1 LINE*** button moves to the next page and the ***SELECT 2 LINES*** button returns to the previous page.

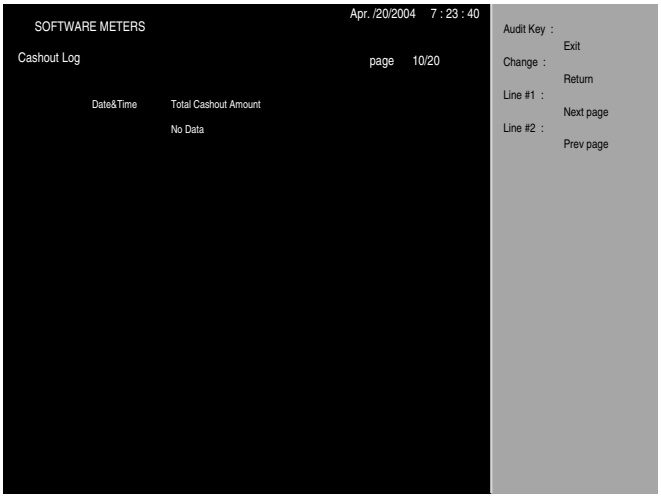

CASHOUT LOG	
Item	**Description**
Date & Time	Cashout time.
Total Amount	Total cashout amount.

Software Meters-Cash Ticket Log-Page 11/20

Displays the history of cash ticket that occurred recently (ticket #, date & time, $ amount of ticket paid and status for the last 35 tickets). The audit key exits the K.M.S., the ***CHANGE*** button returns to the previous menu, the ***SELECT 1 LINE*** button moves to the next page and the ***SELECT 2 LINES*** button returns to the previous page.

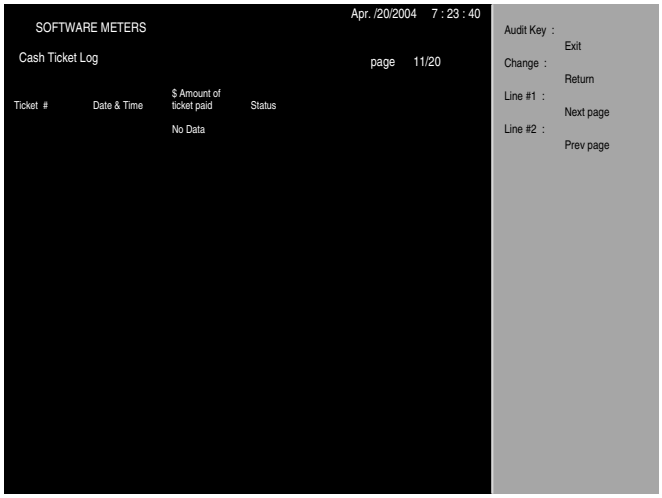

CASH TICKET LOG	
Item	**Description**
Ticket #	Ticket number.
Date & Time	Printed date and time.
$ Amount of ticket paid	Total amount of ticket paid in Dollar.
Status	Print status.

Software Meters-Jackpot Receipt Log-Page 12/20

Displays the history of Jackpot Receipt that printed recently (ticket #, date & time, $ amount of jackpot paid, status and validation of the last 25 jackpot receipts). The audit key exits the K.M.S., the ***CHANGE*** button returns to the previous menu, the ***SELECT 1 LINE*** button moves to the next page and the ***SELECT 2 LINES*** button returns to the previous page.

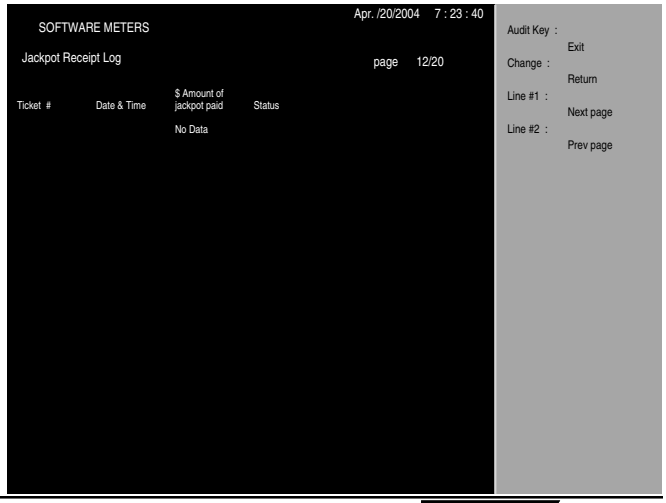

JACKPOT RECEIPT LOG	
Item	**Description**
Ticket #	Ticket number.
Date & Time	Printed date and time.
$ Amount of ticket paid	Total amount of jackpot paid in Dollar.
Status	Print status.

Software Meters-EFT Log-Page 13/20

Displays the history of EFT (Electronic Funds Transfer) that occurred recently (Type, date & time, Request Credits, Transfer Credits, status). The audit key exits the K.M.S., the ***CHANGE*** button returns to the previous menu, the ***SELECT 1 LINE*** button moves to the next page and the ***SELECT 2 LINES*** button returns to the previous page.

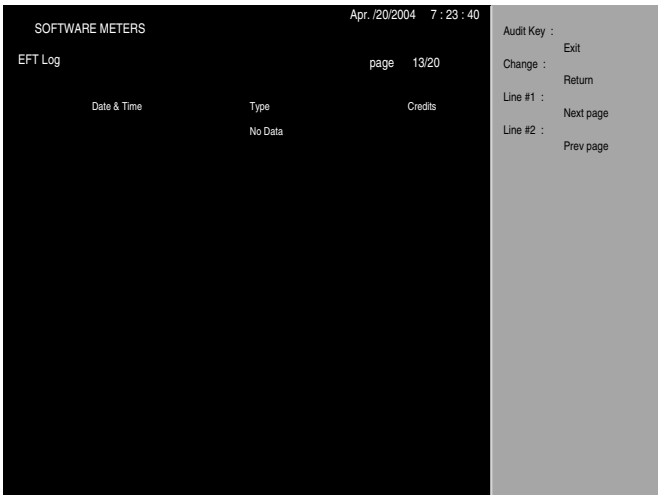

EFT LOG	
Item	**Description**
Date & Time	Requested time.
Request Credits	Total amount of requested credits.
Transfer Credits	Total amount of transferred credits.
Type	Direction of credits flow. To Host: > Credits are transferred to the host. Cash in: > Credits are transferred to the EGM.

Software Meters-System Bonus Log-Page 14/20

Displays the history of system bonus that occurred recently (Type, date & time, type, Transfer Credits, status). The audit key exits the K.M.S., the ***CHANGE*** button returns to the previous menu, the ***SELECT 1 LINE*** button moves to the next page and the ***SELECT 2 LINES*** button returns to the previous page.

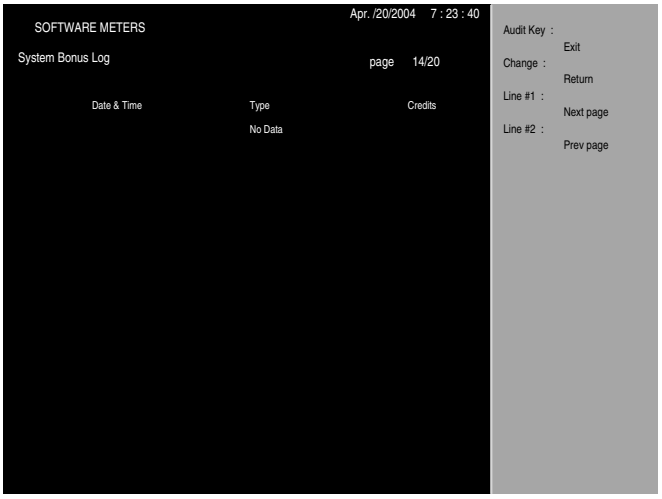

SYSTEM BONUS LOG	
Item	**Description**
Date & Time	Date and time system bonus awarded.
Type	Type of system bonus credits.
Credits	Total amount of transferred credits.

Software Meters-Progressive Jackpot Log-Page15/20

Displays the history of progressive jackpot that occurred recently (Date & time, progressive level and amount paid). The audit key exits the K.M.S., the ***CHANGE*** button returns to the previous menu, the ***SELECT 1 LINE*** button moves to the next page and the ***SELECT 2 LINES*** button returns to the previous page.

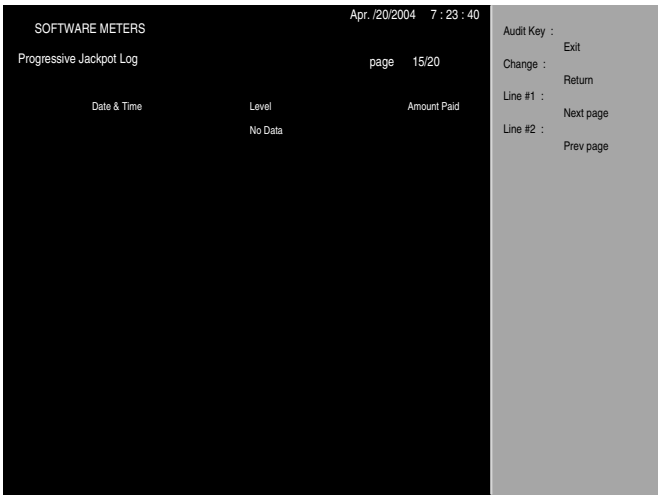

PROGRESSIVE JACKPOT LOG	
Item	**Description**
Date & Time	Date and time progressive awarded.
Level	Progressive level awarded.
Amount Paid	Amount of progressive paid.

Software Meters-Game Meters-General-Page 16/20

Displays the play data on each game installed. The audit key exits the K.M.S., the ***CHANGE*** button returns to the previous menu, the ***SELECT 1 LINE*** button moves to the next page and the ***SELECT 2 LINES*** button returns to the previous page.

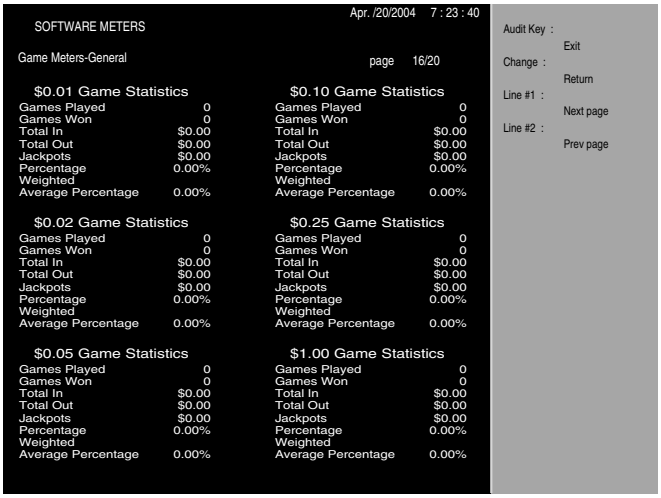

GAME METERS-GENERAL	
Item	**Description**
Games Played	Total number of games played for each denomination.
Games Won	Total number of games won for each denomination.
Total In	Total dollar amount in for each denomination.
Total Out	Total dollar amount out for each denomination.
Jackpots	Total dollar amount jackpot for each denomination.
Percentage	Total expected payback percentage for each denomination.
Weighted Average Percentage	Total actual payback percentage for each denomination.

Software Meters-Game Meters-Detail-Page 17/20

Displays the accounting details of the particular game. The audit key exits the K.M.S., the ***CHANGE*** button returns to the previous menu, the ***SELECT 1 LINE*** button moves to the next page and the ***SELECT 2 LINES*** button returns to the previous page.

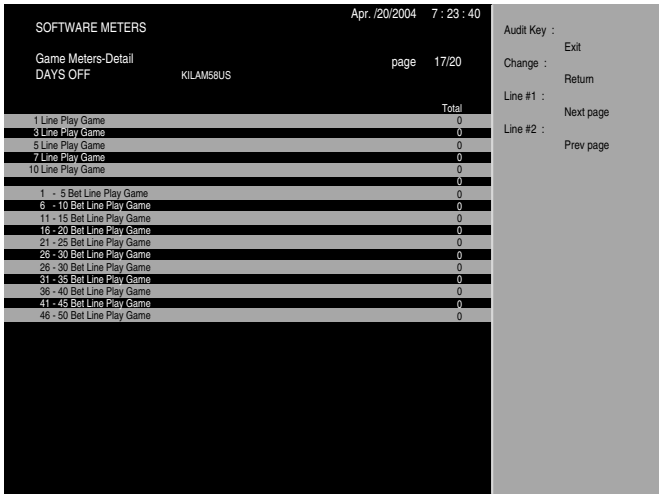

GAME METERS-DETAIL	
Item	**Description**
1 Line Play Game	Total games played by 1 line.
3 Line Play Game	Total games played by 3 line.
5 Line Play Game	Total games played by 5 line.
7 Line Play Game	Total games played by 7 line.
10 Line Play Game	Total games played by 10 line.
1-5 Bet Play Game	Total games played with 1 to5 coins bet.
6-10 Bet Play Game	Total games played with 6 to10 coins bet.
11-15 Bet Play Game	Total games played with 11 to15 coins bet.
16-20 Bet Play Game	Total games played with 16 to20 coins bet.
21-25 Bet Play Game	Total games played with 21 to25 coins bet.
26-30 Bet Play Game	Total games played with 26 to30 coins bet.
31-35 Bet Play Game	Total games played with 31 to35 coins bet.
36-40 Bet Play Game	Total games played with 36 to40 coins bet.
41-45 Bet Play Game	Total games played with 41 to45 coins bet.
46-50 Bet Play Game	Total games played with 46 to50 coins bet.

© 2004 KONAMI GAMING

Software Meters-Game Meters-Detail-Page 18/20

Displays the accounting details of the particular game. The audit key exits the K.M.S., the ***CHANGE*** button returns to the previous menu, the ***SELECT 1 LINE*** button moves to the next page and the ***SELECT 2 LINES*** button returns to the previous page.

NOTE: This meter is game specific and will change according to the installed game. Illustration is for the game "King's Legend" and is used for example only.

The next two screens are a continuation of the game detail screen shown above. Press the ***CHANGE*** button to return to the previous menu. Press the ***SELECT 1 LINE*** button to tab to the **GAME RECALL** field. The following screen displays.

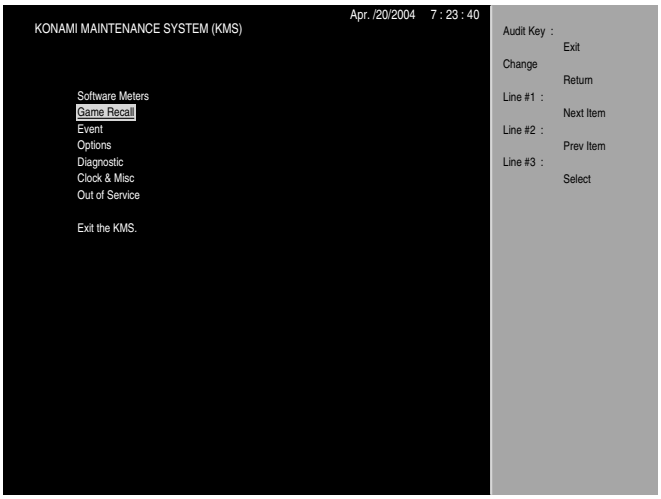

Press the ***SELECT 3 LINES*** button to enter the selection. The following screen displays

Game Recall

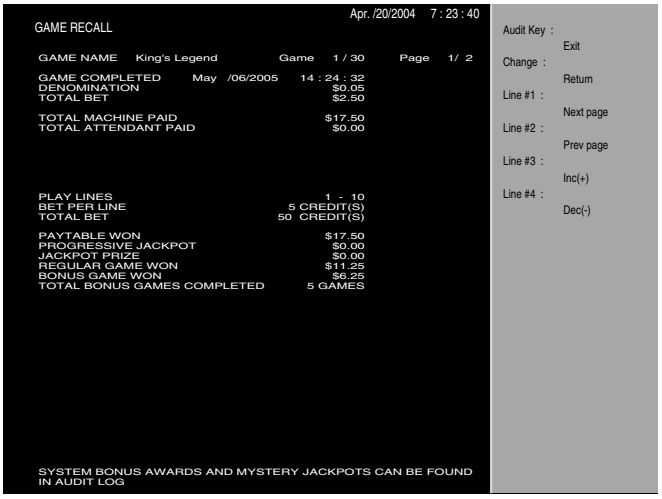

Checks the game history. Displays the summary of the other screens. The audit key exits the K.M.S., the ***CHANGE*** button returns to the previous menu, the ***SELECT 1 LINE*** button displays the next game the ***SELECT 2 LINES*** button displays the previous game, the ***SELECT 3 LINE*** button selects next page and the ***SELECT 4 LINES*** button selects the previous page. Press the ***SELECT 3 LINES*** button to go to the next page. The following screen displays.

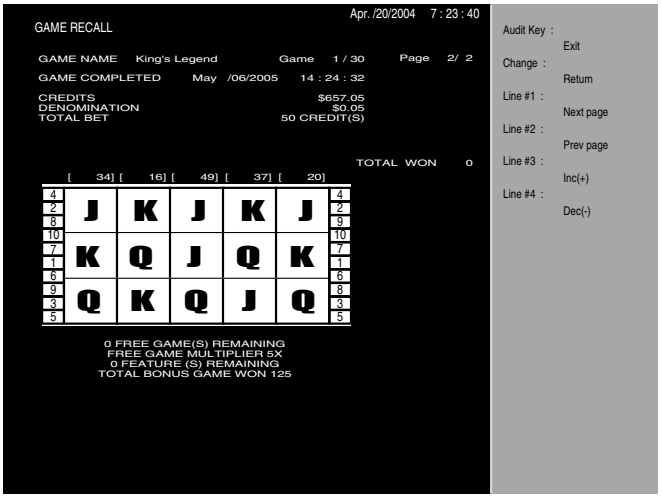

The audit key exits the K.M.S., the ***CHANGE*** button returns to the previous menu, the ***SELECT 1 LINE*** button displays the next game the ***SELECT 2 LINES*** button displays the previous game, the ***SELECT 3 LINE*** button selects next page and the ***SELECT 4 LINES*** button selects the previous page. Press the ***CHANGE*** button to return to the main K.M.S. menu. Press the ***SELECT 1 LINE*** button to tab to the **EVENT** menu. The following screen displays.

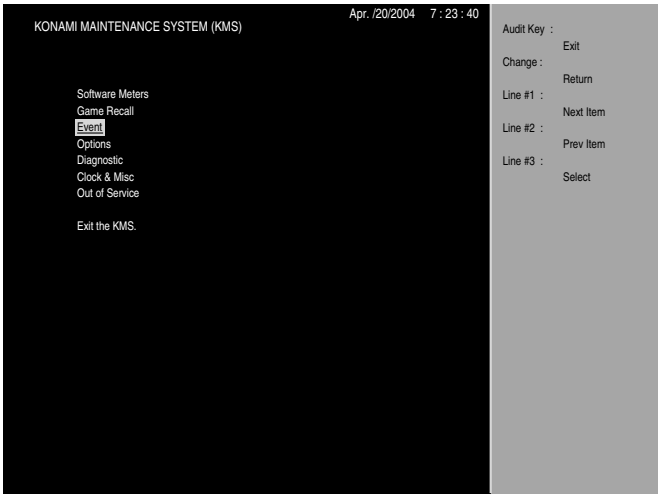

Press the ***SELECT 3 LINES*** button to enter the selection. The following screen displays

Event

Use to access the event meter and event log. The audit key exits the K.M.S., the ***CHANGE*** button returns to the previous menu, the ***SELECT 1 LINE*** button moves the cursor to the next item and the ***SELECT 2 LINES*** button returns to the previous item and the ***SELECT 3 LINES*** enters the selection.

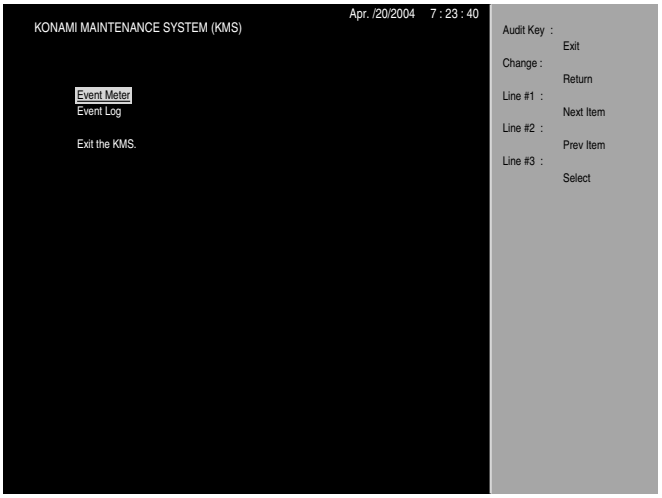

Press the ***SELECT 3 LINES*** button to enter the selection. The following screen displays.

Event Meter

Checks a list of the dates and times and the factors of Events that occurred recently. The audit key exits the K.M.S. and the ***CHANGE*** button returns to the previous menu. For the details of event list, refer to the Troubleshooting section in this manual.

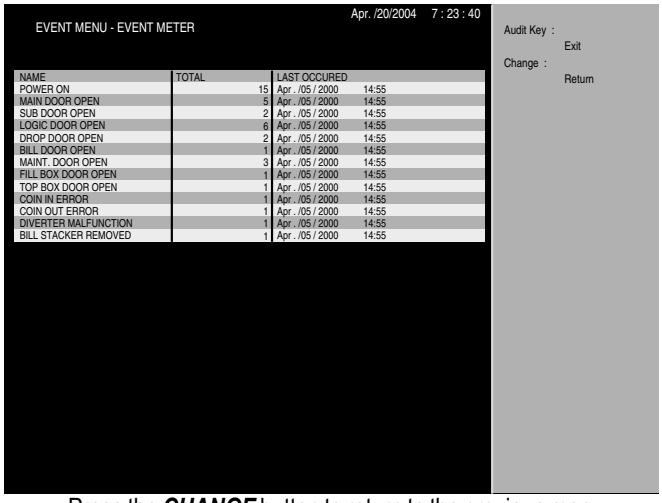

NAME	TOTAL	LAST OCCURED	
POWER ON	15	Apr . /05 / 2000	14:55
MAIN DOOR OPEN	5	Apr . /05 / 2000	14:55
SUB DOOR OPEN	2	Apr . /05 / 2000	14:55
LOGIC DOOR OPEN	6	Apr . /05 / 2000	14:55
DROP DOOR OPEN	2	Apr . /05 / 2000	14:55
BILL DOOR OPEN	1	Apr . /05 / 2000	14:55
MAINT. DOOR OPEN	3	Apr . /05 / 2000	14:55
FILL BOX DOOR OPEN	1	Apr . /05 / 2000	14:55
TOP BOX DOOR OPEN	1	Apr . /05 / 2000	14:55
COIN IN ERROR	1	Apr . /05 / 2000	14:55
COIN OUT ERROR	1	Apr . /05 / 2000	14:55
DIVERTER MALFUNCTION	1	Apr . /05 / 2000	14:55
BILL STACKER REMOVED	1	Apr . /05 / 2000	14:55

Press the ***CHANGE*** button to return to the previous menu. Press the ***SELECT 1 LINE*** button to tab to the **EVENT LOG** field.

Event Log

Checks a list of the dates and times and the factors of Events that occurred recently. For the details of event list, refer to Module 4 (Troubleshooting).

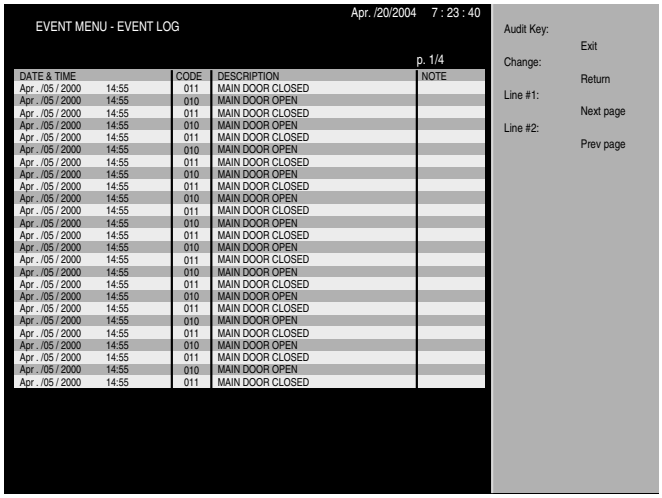

DATE & TIME		CODE	DESCRIPTION	NOTE
Apr . /05 / 2000	14:55	011	MAIN DOOR CLOSED	
Apr . /05 / 2000	14:55	010	MAIN DOOR OPEN	
Apr . /05 / 2000	14:55	011	MAIN DOOR CLOSED	
Apr . /05 / 2000	14:55	010	MAIN DOOR OPEN	
Apr . /05 / 2000	14:55	011	MAIN DOOR CLOSED	
Apr . /05 / 2000	14:55	010	MAIN DOOR OPEN	
Apr . /05 / 2000	14:55	011	MAIN DOOR CLOSED	
Apr . /05 / 2000	14:55	010	MAIN DOOR OPEN	
Apr . /05 / 2000	14:55	011	MAIN DOOR CLOSED	
Apr . /05 / 2000	14:55	010	MAIN DOOR OPEN	
Apr . /05 / 2000	14:55	011	MAIN DOOR CLOSED	
Apr . /05 / 2000	14:55	010	MAIN DOOR OPEN	
Apr . /05 / 2000	14:55	011	MAIN DOOR CLOSED	
Apr . /05 / 2000	14:55	010	MAIN DOOR OPEN	
Apr . /05 / 2000	14:55	011	MAIN DOOR CLOSED	
Apr . /05 / 2000	14:55	010	MAIN DOOR OPEN	
Apr . /05 / 2000	14:55	011	MAIN DOOR CLOSED	
Apr . /05 / 2000	14:55	010	MAIN DOOR OPEN	
Apr . /05 / 2000	14:55	011	MAIN DOOR CLOSED	
Apr . /05 / 2000	14:55	010	MAIN DOOR OPEN	
Apr . /05 / 2000	14:55	011	MAIN DOOR CLOSED	
Apr . /05 / 2000	14:55	010	MAIN DOOR OPEN	
Apr . /05 / 2000	14:55	011	MAIN DOOR CLOSED	
Apr . /05 / 2000	14:55	010	MAIN DOOR OPEN	
Apr . /05 / 2000	14:55	011	MAIN DOOR CLOSED	

The audit key exits the K.M.S. and the ***CHANGE*** button returns to the previous menu. The ***SELECT 1 LINE*** button goes to the next page and the ***SELECT 2 LINES*** button goes to the previous page. For the details of event list, refer to the Trouble-shooting section in this manual.

Press the ***CHANGE*** button to return to the previous menu. Press the ***CHANGE*** button again to return to the main K.M.S. menu. Press the ***SELECT 1 LINE*** button to tab to the **OPTIONS** field, The following screen displays.

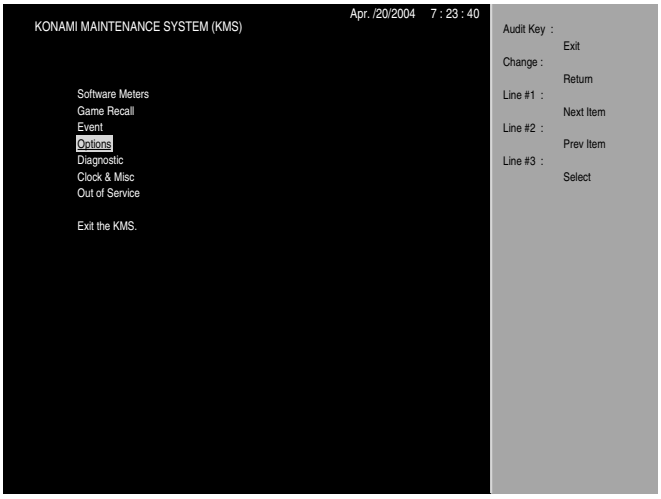

Options

Use to access the options. The audit key exits the K.M.S., the ***SELECT 1 LINE*** button moves to the next item and the ***SELECT 2 LINES*** button returns to the previous item and the ***SELECT 3 LINES*** enters the selection. Press the ***SELECT 3 LINES*** button to enter the selection. The following screen displays.

NOTE: Options can ***ONLY*** be changed when there are no credits on the machine. All of the input/output devices can be turned off separately from one another to keep a machine in operation when that item fails and a replacement part is not on hand. Some options require the use of a LEVEL-0 EL Key.

Setting Options

Checks and changes each Option setting. The audit key exits the K.M.S, the ***CHANGE*** button returns to the previous menu. The ***SELECT 1 LINE*** button moves to the next menu. The ***SELECT 2 LINES*** button moves the cursor to the previous menu. The ***SELECT 3 LINES*** button selects the item where the cursor is placed.

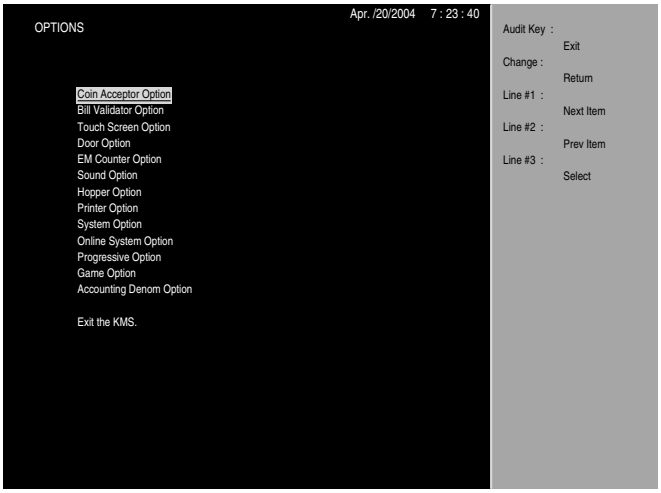

Menu Description

The table below identifies the options currently available.

OPTION MENU DESCRIPTION	
Menu	**Description**
Coin Acceptor Option	Sets the coin acceptor type and the coin drop sensor on or off.
Bill Validator Option	Sets the bill validator type, the acceptance of bill denominations, the redeem voucher and bill stacker alarm.
Touch Screen Option	Sets the touchscreen on or off.
Door Option	Sets the coin drop door sensor on or off.
EM Counter Option	Sets the EM counters on or off.
Sound Option	Sets the sound volume level.
Hopper Option	Sets the hopper on or off.
Printer Option	Sets the printer on or off, the type of printer used and the ticket out sound on or off.
System Option	Sets the machine number, asset number, auto cashout, credit intervention, allow partial pay, credit limit, machine cashout limit, hopper cashout limit, hopper cashout limit 2, ticket limit, reset jackpot to credit meter, jackpot limit, reset jackpot limit, player denomination, default game denom., progressive denom., token denomination and residual credit.
On Line System Option	Sets the comm port protocol, address and lockup status for the three comm ports. Sets the ticket port, coupon port, validation schemeand print receipts on or off. Sets the machine control, EFT control, system bonus control ports. Sets the progressive control and mystery jackpot ports.
Progressive Option	Sets the top award type, group ID, max progressive levels and the mystery jackpot type and threshold.
Game Option	Sets the paytable percentage for available denominations, the play line max wager, the bet line max wager, the attract mode on or off, the attract mode sound level, the attract mode interval and the cash display
Accounting Denom Option	Sets the denomination used for accounting.
Return to previous menu	Returns to the previous menu.

© 2004 KONAMI GAMING

Coin Acceptor Options

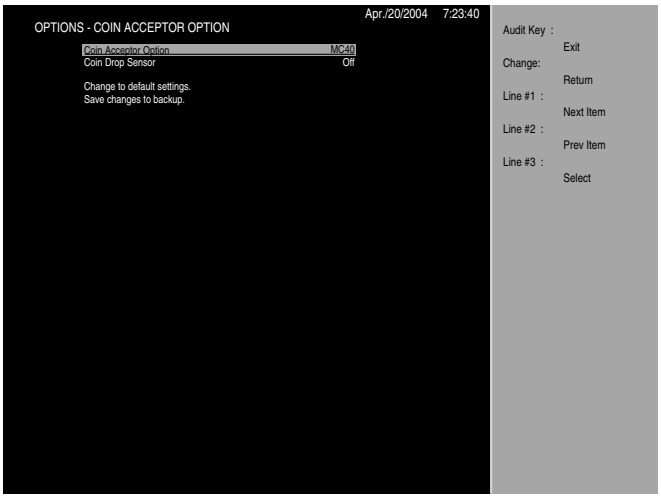

The **COIN ACCEPTOR OPTION** field is highlighted. Press the ***SELECT 3 LINES*** button to enter the selection. The following screen displays.

COIN ACCEPTOR OPTION	
Option	**Description**
Coin Acceptor	OFF: No coin acceptor is used. CN130: CN130 coin acceptor is used. MC40: MC40 coin acceptor is used. MC40WB: MC40WB coin acceptor is used.
Coin Drop Sensor	OFF: Coin drop sensor is disabled. ON: Coin drop sensor is enabled.

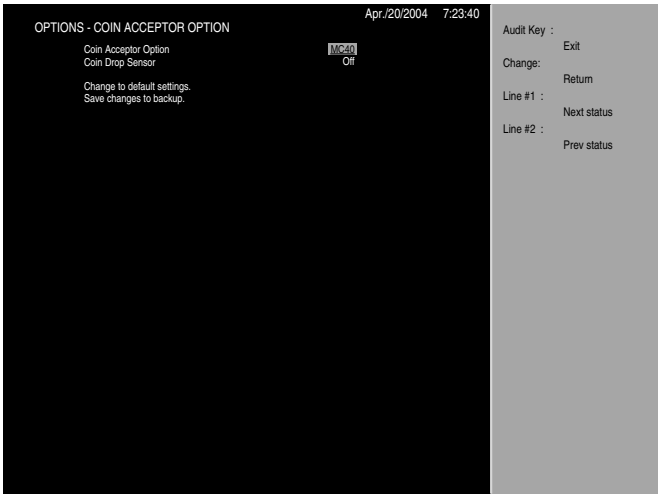

The audit key exits the K.M.S., the ***CHANGE*** button returns to the previous menu, the ***SELECT 1 LINE*** button moves to the next status and the ***SELECT 2 LINES*** button returns to the previous status. Press the ***CHANGE*** button to return to the coin acceptor option screen. Press the ***SELECT 1 LINE*** button to tab to the **COIN DROP SENSOR** field. Press the ***SELECT 3 LINES*** button to enter the selection. The following screen displays.

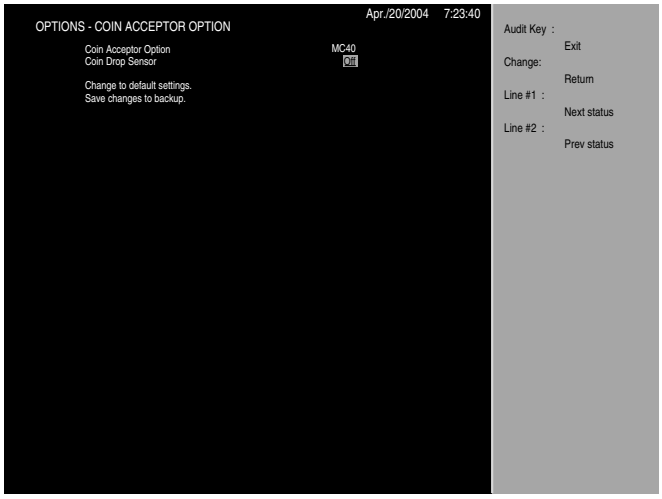

The audit key exits the K.M.S., the ***CHANGE*** button returns to the previous menu, the ***SELECT 1 LINE*** button moves to the next status and the ***SELECT 2 LINES*** button returns to the previous status. Press the ***CHANGE*** button to return to the coin acceptor options screen. Press the ***CHANGE*** button again to return to the **OPTIONS** menu. Press the ***SELECT 1 LINE*** button to tab to the **BILL VALIDATOR OPTION** field. The following screen displays.

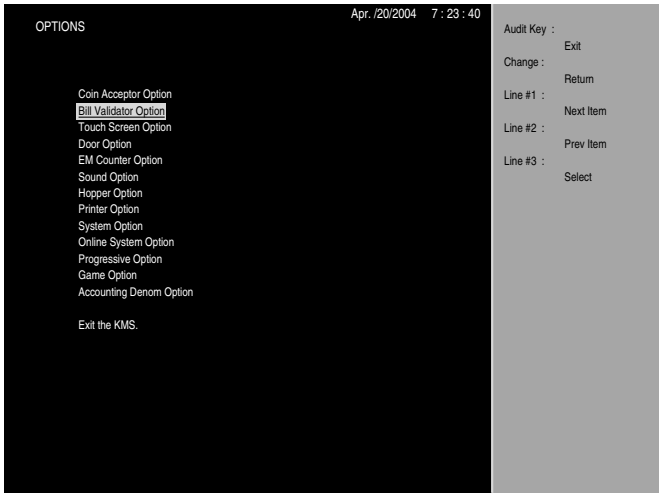

The audit key exits the K.M.S., the ***CHANGE*** button returns to the previous menu, the ***SELECT 1 LINE*** button moves to the next item, the ***SELECT 2 LINES*** button returns to the previous item and the ***SELECT 3 LINES*** enters the selection. Press the ***SELECT 3 LINES*** button to enter the selection. The following screen displays.

Bill Validator Options

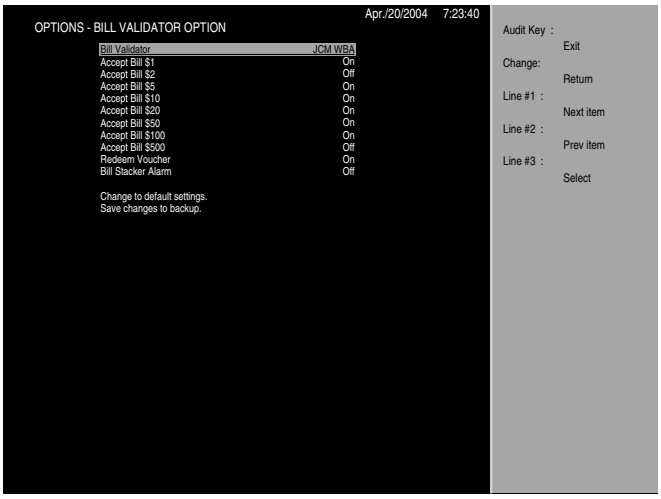

BILL VALIDATOR OPTION	
Option	**Description**
Bill Validator	OFF: Bill validator not used. JCM WBA: JCM-WBA used. Mars ZT: Mars ZT used.
Accept Bill $1	OFF: Rejected. ON: $1 bill accepted.
Accept Bill $2	OFF: Rejected. ON: $2 bill accepted.
Accept Bill $5	OFF: Rejected. ON: $5 bill accepted.
Accept Bill $10	OFF: Rejected. ON: $10 bill accepted.
Accept Bill $20	OFF: Rejected. ON: $20 bill accepted.
Accept Bill $50	OFF: Rejected. ON: $50 bill accepted.
Accept Bill $100	OFF: Rejected. ON: $100 bill accepted.
Accept Bill $500	OFF: Rejected. ON: $500 bill accepted.
Redeem Voucher	OFF: Rejected. ON: Accepted.
Bill Stacker Alarm	OFF: Call Attendant action not taken. (Game by coin permitted) ON: Call Attendant action taken.

Press the ***SELECT 3 LINES*** button to enter the selection. The following screen displays.

Setting Bill Validator Option-Bill Validator Type

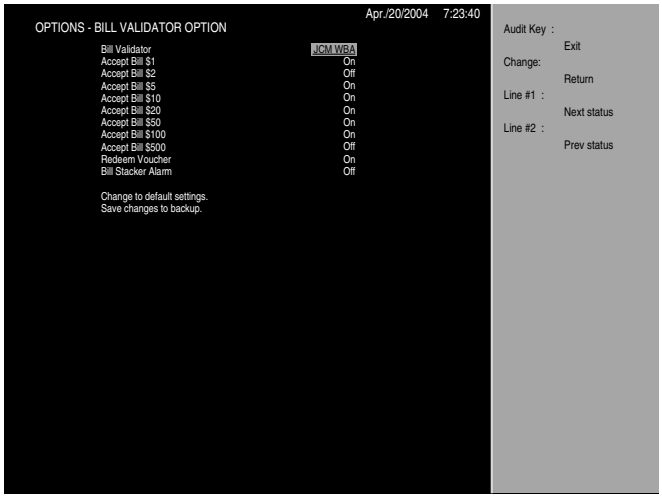

When setting up the value of the option, the audit key exits the K.M.S., the ***CHANGE*** button returns to the item select screen, the ***SELECT 1 LINE*** button selects the next status and the ***SELECT 2 LINES*** button selects the previous status. To set the bill validator option to MARS ZT, press the ***SELECT 1 LINE*** button twice to change the status to MARS ZT. Press the ***CHANGE*** button to return to the bill validator options screen. Press the ***SELECT 1 LINE*** button to tab to the **ACCEPT BILL $1** field. Press the ***SELECT 3 LINES*** button to enter the selection. The following screen displays.

Setting Bill Validator Option-Accept Bill $1

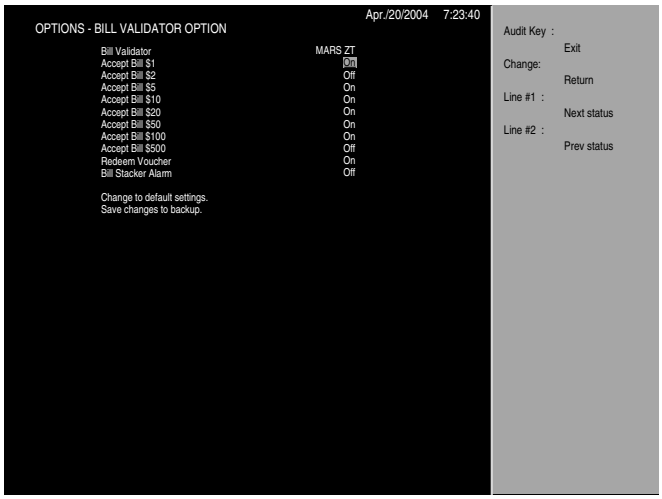

NOTE: For Canadian operation (using the WBA-23), the option for $1 ***MUST*** be set to disable. Failure to set the option to disable will result in error code lockup of the machine.

When setting up the value of the option, the audit key exits the K.M.S., the ***CHANGE*** button returns to the item select screen, the ***SELECT 1 LINE*** button selects the next status and the ***SELECT 2 LINES*** button selects the previous status. To accept the option of accept bill $1 to ON, press the ***CHANGE*** button to return to the bill validator options screen. Press the ***SELECT 1 LINE*** button to tab to

the **ACCEPT BILL $2** field. Press the ***SELECT 3 LINES*** button to enter the selection. The following screen displays.

Setting Bill Validator Option-Accept Bill $2

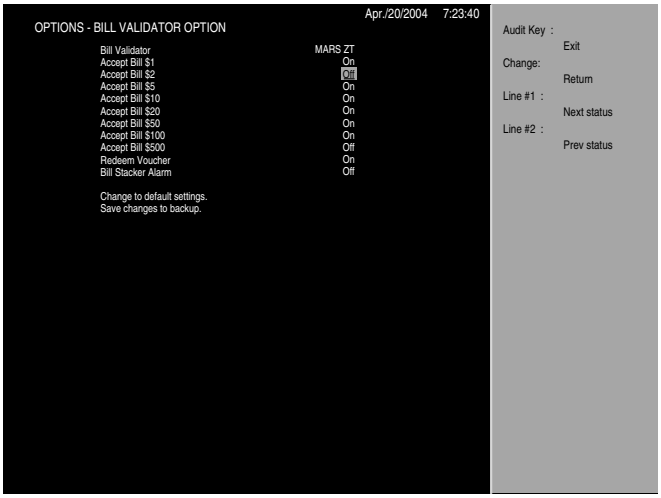

When setting up the value of the option, the audit key exits the K.M.S., the ***CHANGE*** button returns to the item select screen, the ***SELECT 1 LINE*** button selects the next status and the ***SELECT 2 LINES*** button selects the previous status. To accept to option of accept bill $2 to OFF, press the ***CHANGE*** button to return to the bill validator options screen. Press the ***SELECT 1 LINE*** button to tab to the **ACCEPT BILL $5** field. Press the ***SELECT 3 LINES*** button to enter the selection. The following screen displays.

Setting Bill Validator Option-Accept Bill $5

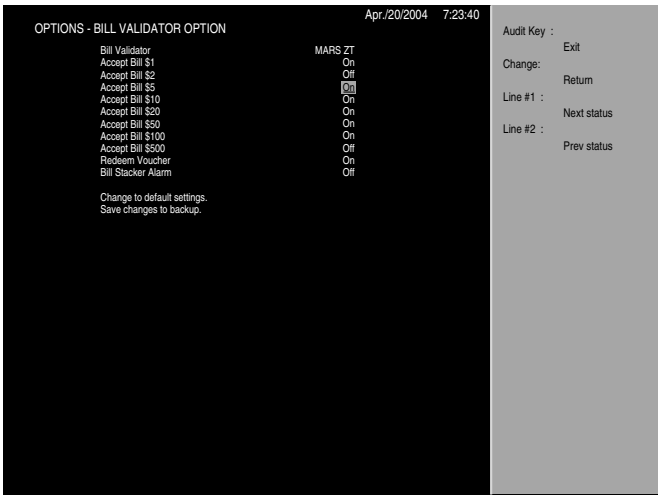

When setting up the value of the option, the audit key exits the K.M.S., the ***CHANGE*** button returns to the item select screen, the ***SELECT 1 LINE*** button selects the next status and the ***SELECT 2 LINES*** button selects the previous status. To accept the option of accept bill $5 to ON, press the ***CHANGE*** button to return to the bill validator options screen. Press the ***SELECT 1 LINE*** button to tab to the **ACCEPT BILL $10** field. Press the ***SELECT 3 LINES*** button to enter the selection. The following screen displays.

Setting Bill Validator Option-Accept Bill $10

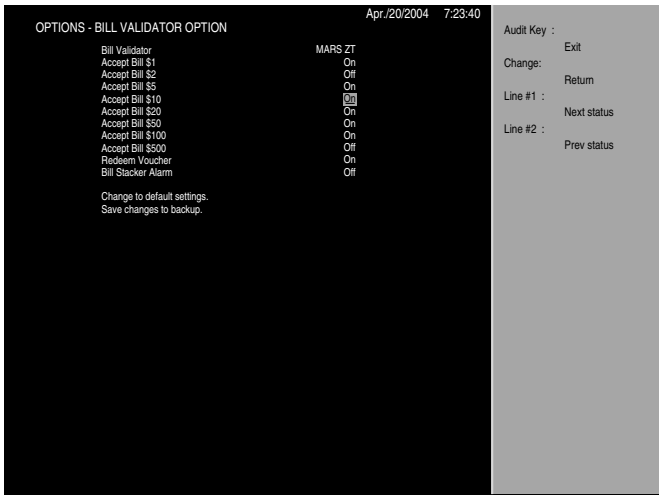

When setting up the value of the option, the audit key exits the K.M.S., the ***CHANGE*** button returns to the item select screen, the ***SELECT 1 LINE*** button selects the next status and the ***SELECT 2 LINES*** button selects the previous status. To accept the option of accept bill $10 to ON, press the ***CHANGE*** button to return to the bill validator options screen. Press the ***SELECT 1 LINE*** button to tab to the **ACCEPT BILL $20** field. Press the ***SELECT 3 LINES*** button to enter the selection. The following screen displays.

Setting Bill Validator Option-Accept Bill $20

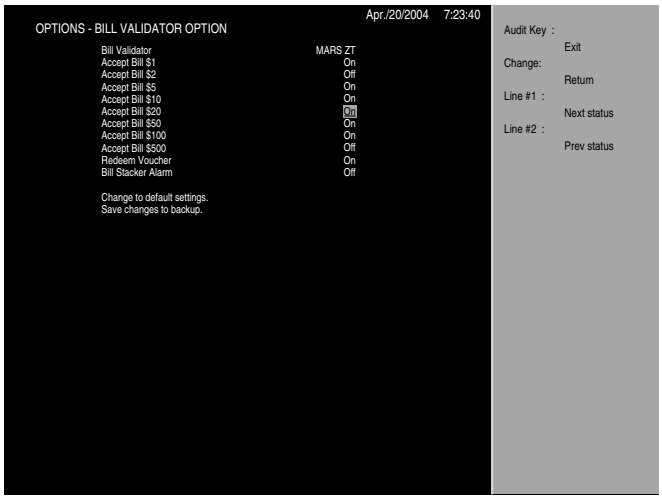

When setting up the value of the option, he audit key exits the K.M.S., the ***CHANGE*** button returns to the item select screen, the ***SELECT 1 LINE*** button selects the next status and the ***SELECT 2 LINES*** button selects the previous status. To accept the option of accept bill $50 to ON, press the ***CHANGE*** button to return to the bill validator options screen. Press the ***SELECT 1 LINE*** button to tab to the **ACCEPT BILL $50** field. Press the ***SELECT 3 LINES*** button to enter the selection. The following screen displays.

Setting Bill Validator Option-Accept Bill $50

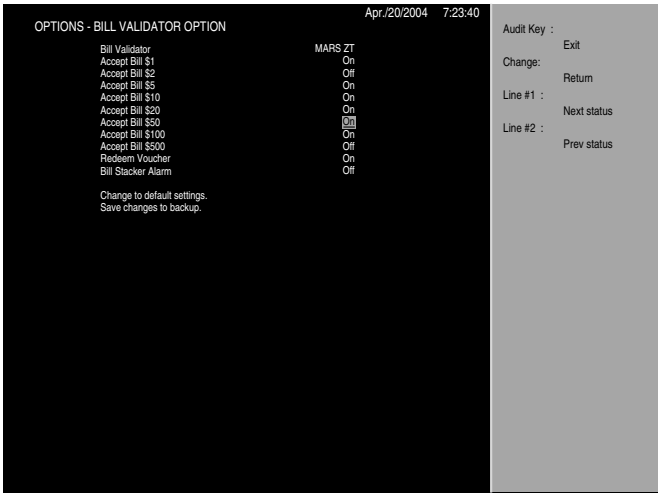

When setting up the value of the option, he audit key exits the K.M.S., the ***CHANGE*** button returns to the item select screen, the ***SELECT 1 LINE*** button selects the next status and the ***SELECT 2 LINES*** button selects the previous status. To accept the option of accept bill $50 to ON, press the ***CHANGE*** button to return to the bill validator options screen. Press the ***SELECT 1 LINE*** button to tab to the **ACCEPT BILL $100** field. Press the ***SELECT 3 LINES*** button to enter the selection. The following screen displays.

Setting Bill Validator Option-Accept Bill $100

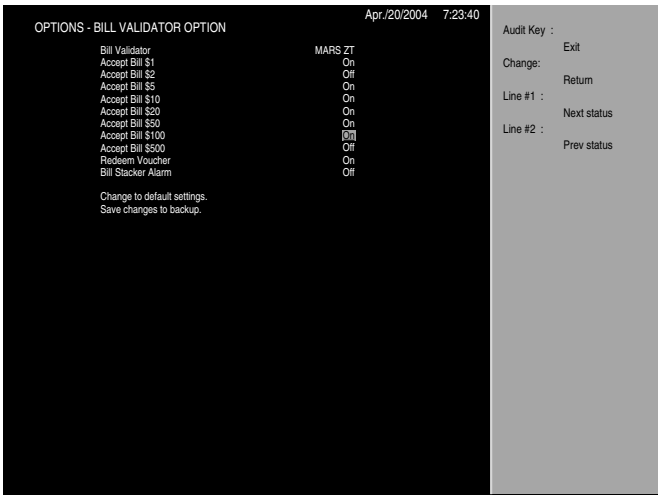

When setting up the value of the option, the audit key exits the K.M.S., the ***CHANGE*** button returns to the item select screen, the ***SELECT 1 LINE*** button selects the next status and the ***SELECT 2 LINES*** button selects the previous status. To accept the option of accept bill $100 to ON, press the ***CHANGE*** button to return to the bill validator options screen. Press the ***SELECT 1 LINE*** button to tab to the **ACCEPT BILL $500** field. Press the ***SELECT 3 LINES*** button to enter the selection. The following screen displays.

Setting Bill Validator Option-Accept Bill $500

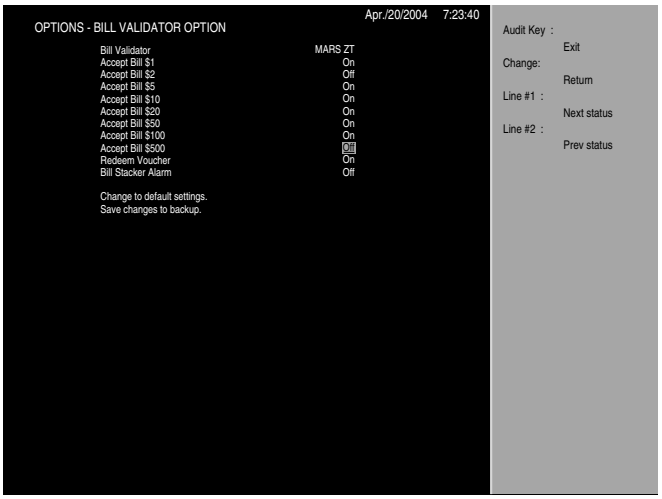

When setting up the value of the option, he audit key exits the K.M.S., the ***CHANGE*** button returns to the item select screen, the ***SELECT 1 LINE*** button selects the next status and the ***SELECT 2 LINES*** button selects the previous status. To accept the option of accept bill $500 to OFF, press the ***CHANGE*** button to return to the bill validator options screen. Press the ***SELECT 1 LINE*** button to tab to the **REDEEM VOUCHER** field. Press the ***SELECT 3 LINES*** button to enter the selection. The following screen displays.

Setting Bill Validator Option-Redeem Voucher

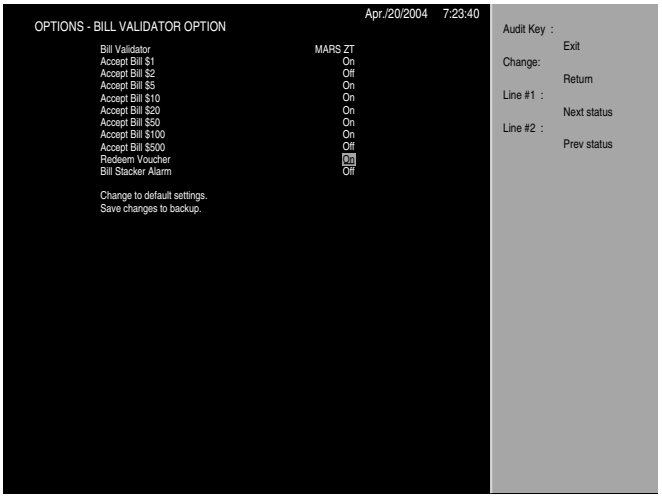

When setting up the value of the option, the audit key exits the K.M.S., the ***CHANGE*** button returns to the item select screen, the ***SELECT 1 LINE*** button selects the next status and the ***SELECT 2 LINES*** button selects the previous status. To accept the option of redeem voucher ON, press the ***CHANGE*** button to return to the bill validator options screen. Press the ***SELECT 1 LINE*** button to tab to the **BILL STACKER ALARM** field. Press the ***SELECT 3 LINES*** button to enter the selection. The following screen displays.

Setting Bill Validator Option-Bill Stacker Alarm

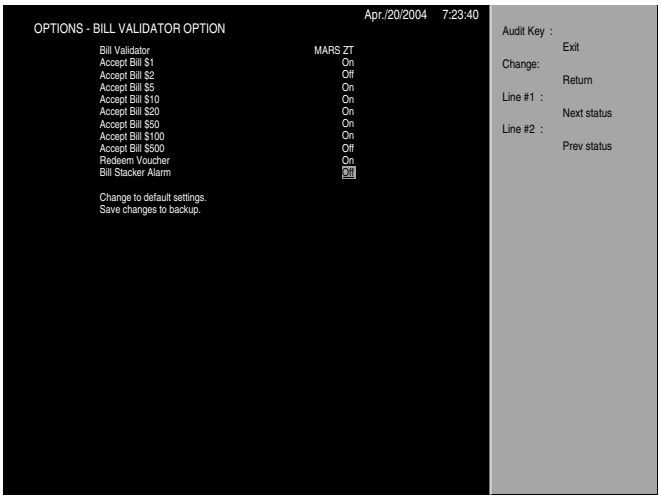

When setting up the value of the option, the audit key exits the K.M.S., the ***CHANGE*** button returns to the item select screen, the ***SELECT 1 LINE*** button selects the next status and the ***SELECT 2 LINES*** button selects the previous status. To accept the option of bill stacker alarm off, press the ***CHANGE*** button to return to the bill validator options screen. Press the ***CHANGE*** button again to return to the main **OPTIONS** menu. Press the ***SELECT 1 LINE*** button to tab to the **TOUCH SCREEN OPTION** field. The following screen displays.

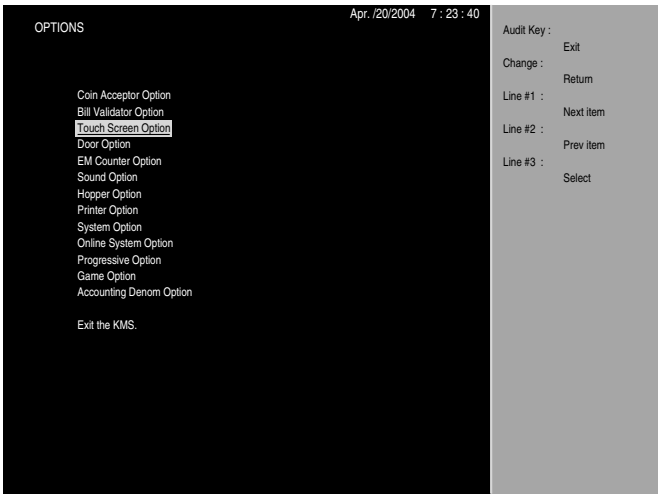

The audit key exits the K.M.S., the ***SELECT 1 LINE*** button moves the cursor to the next item and the ***SELECT 2 LINES*** button returns to the previous item and the ***SELECT 3 LINES*** enters the selection. Press the ***SELECT 3 LINES*** button to enter the selection. The following screen displays.

Options -Touch Screen Option

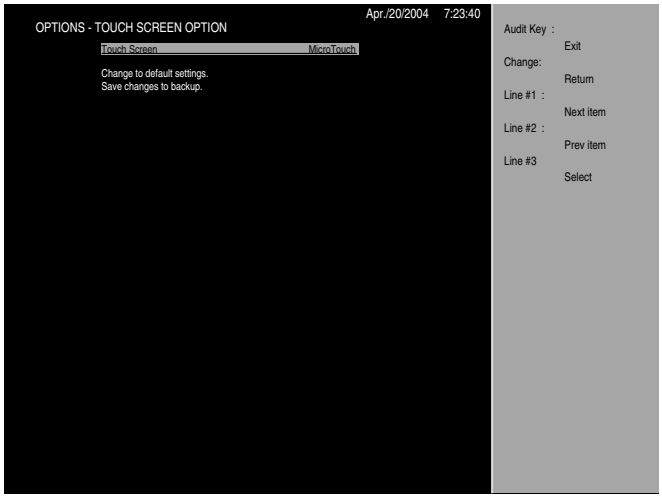

The **TOUCHSCREEN** field is highlighted. Press the ***SELECT 3 LINES*** button to enter the selection. The following screen displays.

Setting Touch Screen Option On/Off

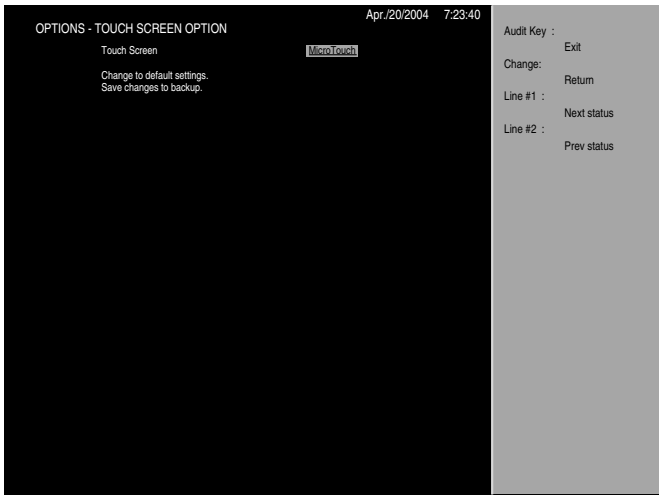

When setting up the value of the option, the audit key exits the K.M.S., the ***CHANGE*** button returns to the item select screen, the ***SELECT 1 LINE*** button selects the next status and the ***SELECT 2 LINES*** button selects the previous status. To accept the option of microtouch, press the ***CHANGE*** button to return to the touchscreen options screen. Press the ***CHANGE*** button again to return to the main **OPTIONS** menu. Press the ***SELECT 1 LINE*** button to tab to the **DOOR OPTION** field. The following screen displays.

Options-Door Option

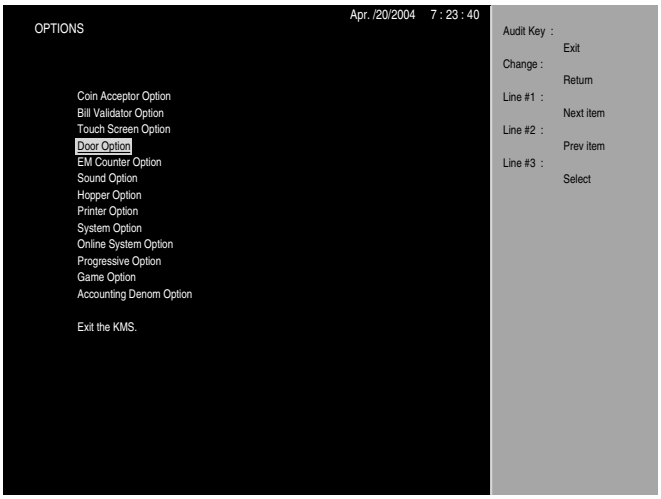

The audit key exits the K.M.S., the ***SELECT 1 LINE*** button moves to the next item, the ***SELECT 2 LINES*** button returns to the previous item and the ***SELECT 3 LINES*** enters the selection. Press the ***SELECT 3 LINES*** button to enter the selection. The following screen displays.

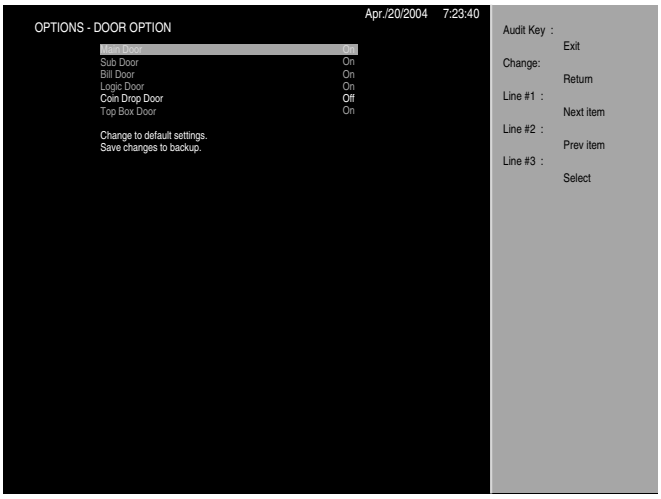

NOTE: The door options are preset at the factory to "ON" (excepting the coin drop door option).

The audit key exits the K.M.S., the ***CHANGE*** button returns to the previous menu, the ***SELECT 1 LINE*** button moves the cursor to the next item, the ***SELECT 2 LINES*** button returns to the previous item and the ***SELECT 3 LINES*** enters the selection. Press the ***SELECT 1 LINE*** button to tab to the **COIN DROP DOOR** field. Press the ***SELECT 3 LINES*** button to enter the selection. The following screen displays.

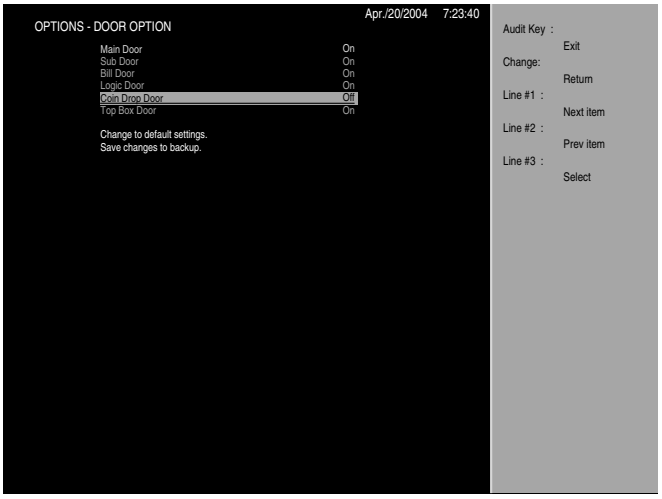

Setting Coin Drop Door Option

The **COIN DROP DOOR** field is highlighted. Press the ***SELECT 3 LINES*** button to enter the selection. The following screen displays.

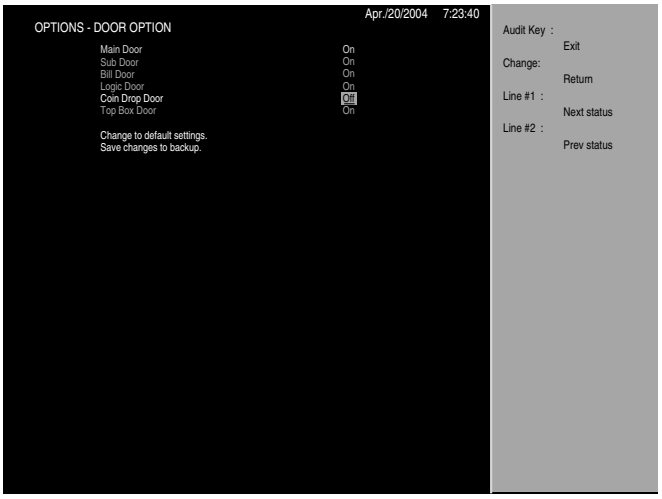

When setting up the value of the option, the audit key exits the K.M.S., the ***CHANGE*** button returns to the item select screen, the ***SELECT 1 LINE*** button selects the next status and the ***SELECT 2 LINES*** button selects the previous status. To accept the option of coin drop door off, press the ***CHANGE*** button to return to the door options screen. Press the ***CHANGE*** button again to return to the main **OPTIONS** menu. Press the ***SELECT 1 LINE*** button to tab to the **EM COUNTER OPTION** field. The following screen displays.

Options-EM Counter Option

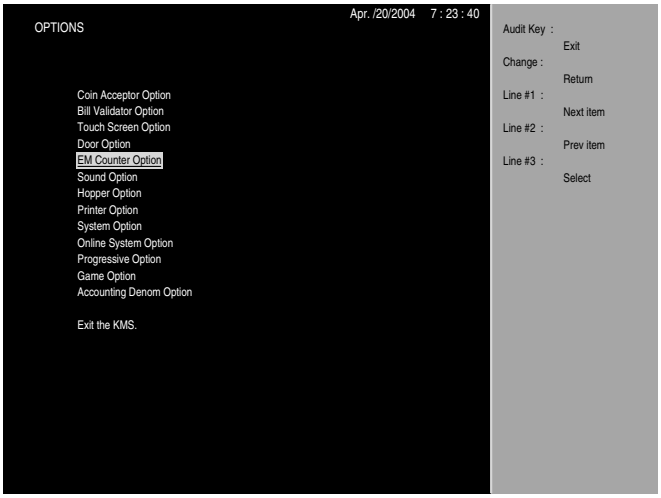

The audit key exits the K.M.S., the ***SELECT 1 LINE*** button moves to the next item, the ***SELECT 2 LINES*** button returns to the previous item and the ***SELECT 3 LINES*** enters the selection. Press the ***SELECT 3 LINES*** button to enter the selection. The **EM COUNTER** field is highlighted. Press the ***SELECT 3 LINES*** button to enter the selection. The following screen displays.

EM COUNTER OPTION	
Option	**Description**
EM counter 1 (Total In)	OFF: Not used. ON: Active
EM counter 2 (Total Out)	OFF: Not used. ON: Active
EM counter 3 (Total Drop)	OFF: Not used. ON: Active
EM counter 4 (Jackpot Attendant Pay)	OFF: Not used. ON: Active
EM counter 5 (Total Bill)	OFF: Not used. ON: Active
EM counter 6	OFF: Not used. ON: Active
EM counter 7	OFF: Not used. ON: Active
EM counter 8	OFF: Not used. ON: Active
EM counter 9	OFF: Not used. ON: Active
EM counter 10	OFF: Not used. ON: Active
EM counter Access	OFF: EM COUNTER EXISTS not checked. ON: EM COUNTER EXISTS checked.

NOTE: EM Counters 6-10 are reserved for future use and should be set to OFF. Failure to set these options to OFF will result in an error code lockup of the machine.

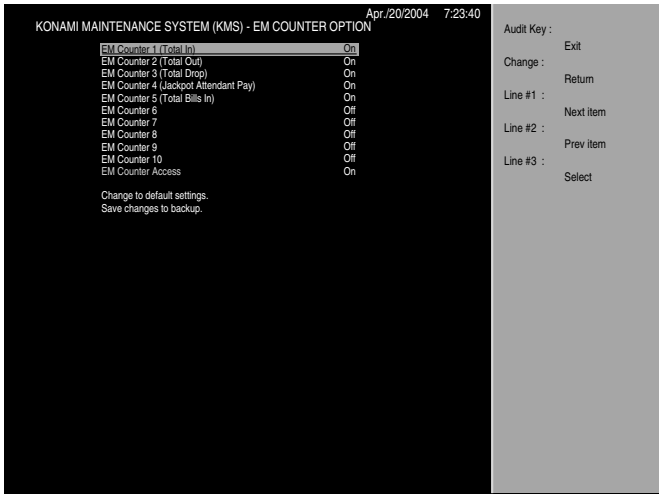

The audit key exits the K.M.S., the ***SELECT 1 LINE*** button moves to the next item and the ***SELECT 2 LINES*** button returns to the previous item and the ***SELECT 3 LINES*** enters the selection. Press the ***SELECT 3 LINES*** button to enter the selection. The following screen displays.

Setting EM Counter 1 (Total In)

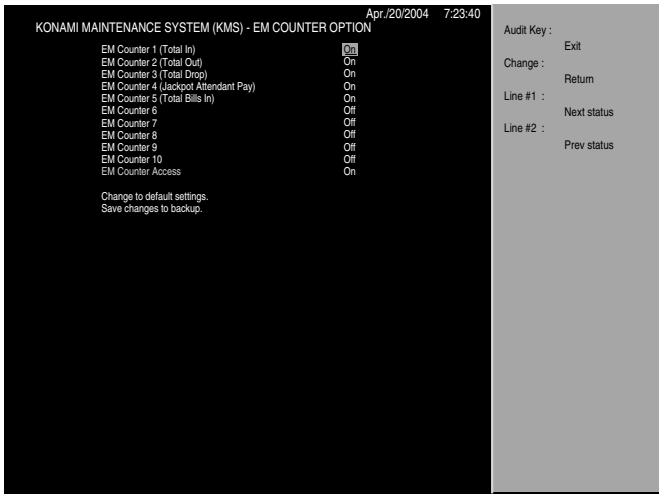

When setting up the value of the option, the audit key exits the K.M.S., the ***CHANGE*** button returns to the item select screen, the ***SELECT 1 LINE*** button selects the next status and the ***SELECT 2 LINES*** button selects the previous status. To accept the option of EM counter 1 to on, press the ***CHANGE*** button to return to the EM counter options screen. Press the ***SELECT 1 LINE*** button to tab to the **EM COUNTER 2 (TOTAL OUT)** field. Press the ***SELECT 3 LINES*** button to enter the selection. The following screen displays.

Setting EM Counter 2 (Total Out)

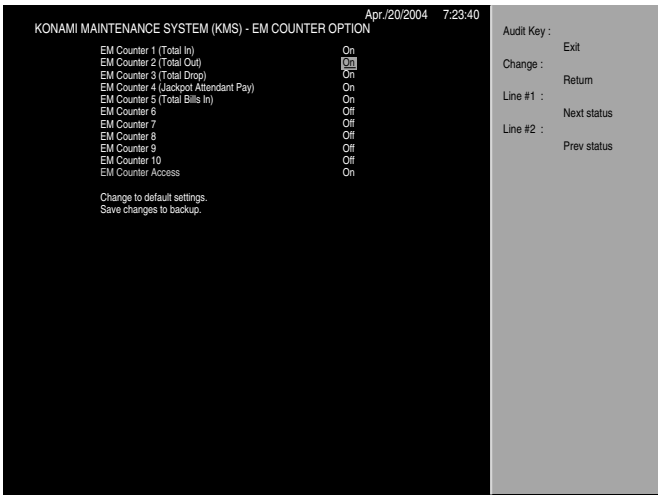

When setting up the value of the option, the audit key exits the K.M.S., the ***CHANGE*** button returns to the item select screen, the ***SELECT 1 LINE*** button selects the next status and the ***SELECT 2 LINES*** button selects the previous status. To accept the option of EM counter 2 to on, press the ***CHANGE*** button to return to the EM counter options screen. Press the ***SELECT 1 LINE*** button to tab to the **EM COUNTER 3 (TOTAL DROP)** field. Press the ***SELECT 3 LINES*** button to enter the selection. The following screen displays.

Setting EM Counter 3 (Total Drop)

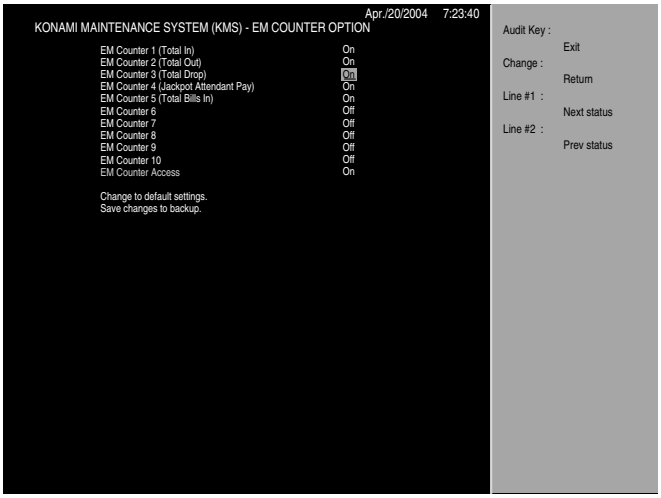

When setting up the value of the option, the audit key exits the K.M.S., the ***CHANGE*** button returns to the item select screen, the ***SELECT 1 LINE*** button selects the next status and the ***SELECT 2 LINES*** button selects the previous status. To accept the option of EM counter 3 to on, press the ***CHANGE*** button to return to the EM counter options screen. Press the ***SELECT 1 LINE*** button to tab to the **EM COUNTER 4 (JACKPOT ATTENDANT PAY)** field. Press the ***SELECT 3 LINES*** button to enter the selection. The following screen displays.

Setting EM Counter 4 (Jackpot Attendant Pay)

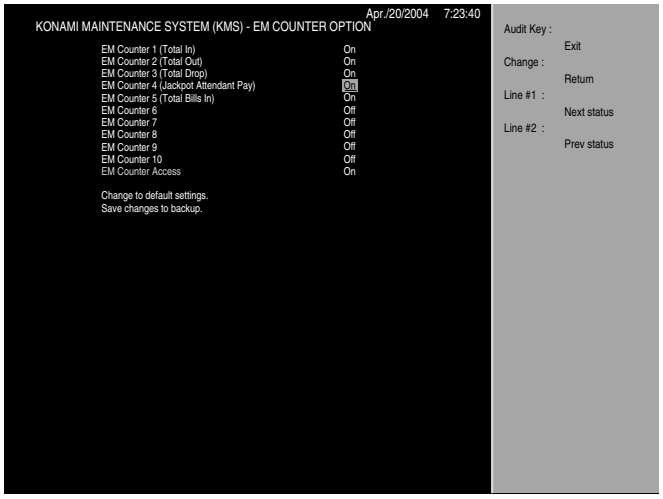

When setting up the value of the option, the audit key exits the K.M.S., the ***CHANGE*** button returns to the item select screen, the ***SELECT 1 LINE*** button selects the next status and the ***SELECT 2 LINES*** button selects the previous status. To accept the option of EM counter 4 to on, press the ***CHANGE*** button to return to the EM counter options screen. Press the ***SELECT 1 LINE*** button to tab to the **EM COUNTER 5 (TOTAL BILLS IN)** field. Press the ***SELECT 3 LINES*** button to enter the selection. The following screen displays.

Setting EM Counter 5 (Total Bills In)

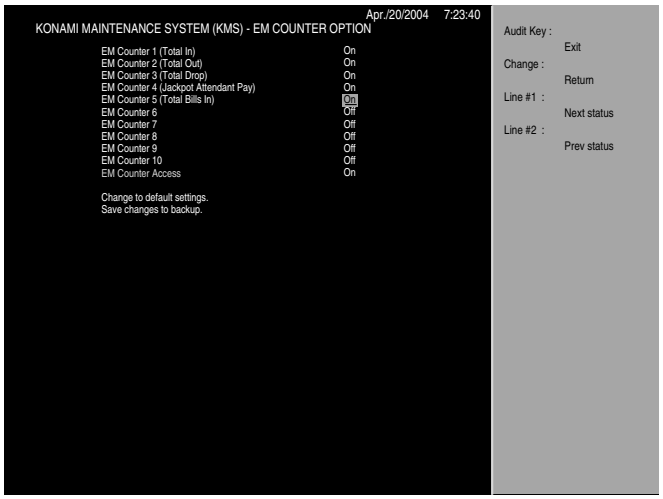

When setting up the value of the option, the audit key exits the K.M.S., the ***CHANGE*** button returns to the item select screen, the ***SELECT 1 LINE*** button selects the next status and the ***SELECT 2 LINES*** button selects the previous status. To accept the option of EM counter 5 to on, press the ***CHANGE*** button to return to the EM counter options screen. Press the ***SELECT 1 LINE*** button to tab to the **EM COUNTER ACCESS** field. Press the ***SELECT 3 LINES*** button to enter the selection. The following screen displays.

NOTE: EM counters 6-10 are reserved for future use and should be set to “OFF”.

Setting EM Counter Access

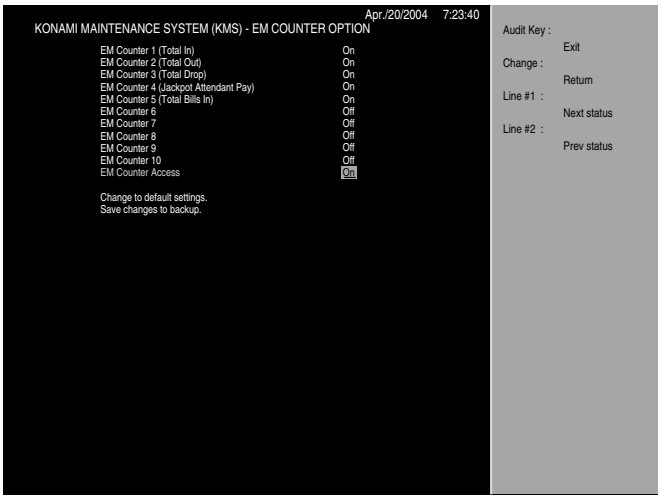

When setting up the value of the option, the audit key exits the K.M.S., the ***CHANGE*** button returns to the item select screen, the ***SELECT 1 LINE*** button selects the next status and the ***SELECT 2 LINES*** button selects the previous status. To accept the option of EM counter access to on, press the ***CHANGE*** button to return to the EM counter options screen. Press the ***CHANGE*** button again to return to the main options screen. Press the ***SELECT 1 LINE*** button to tab to the **SOUND OPTION** field. The following screen displays.

Sound Option

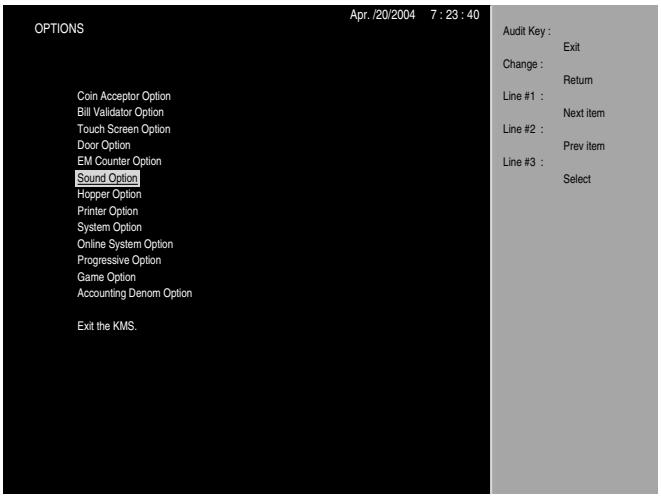

The audit key exits the K.M.S., the ***SELECT 1 LINE*** button moves to the next item and the ***SELECT 2 LINES*** button returns to the previous item and the ***SELECT 3 LINES*** enters the selection. The **SOUND OPTION** field is highlighted. Press the ***SELECT 3 LINES*** button to enter the selection. The following screen displays.

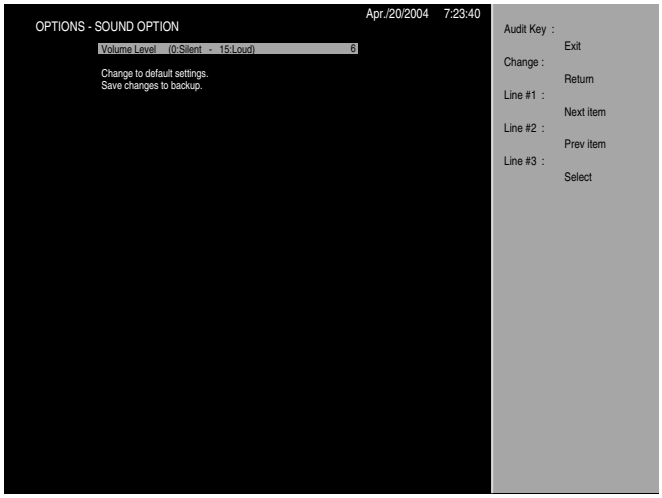

The **VOLUME LEVEL** field is highlighted. Press the ***SELECT 3 LINES*** button to enter the selection. The following screen displays.

Setting Sound Volume

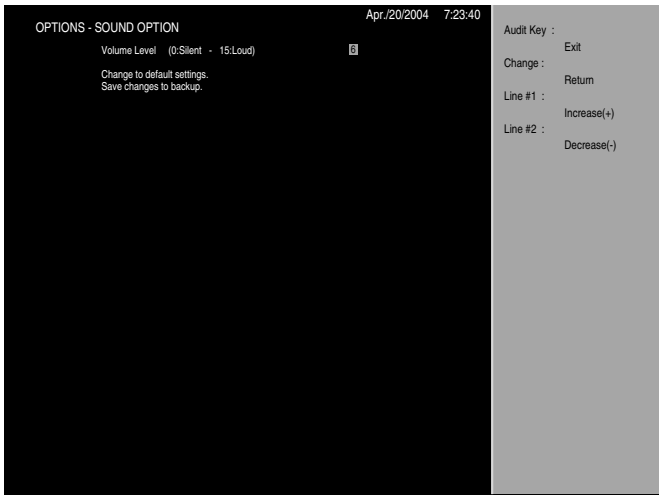

When setting up the value of the option, the audit key exits the K.M.S., the ***CHANGE*** button returns to the item select screen, the ***SELECT 1 LINE*** button increments the selection once for each time pressed and the ***SELECT 2 LINES*** button decrements the selection once for each time pressed. Press the ***CHANGE*** button to return to the sound options screen. Press the ***CHANGE*** button again to return to the main options screen. Press the ***SELECT 1 LINE*** button to tab to the **HOPPER OPTION** field. The following screen displays.

Hopper Option

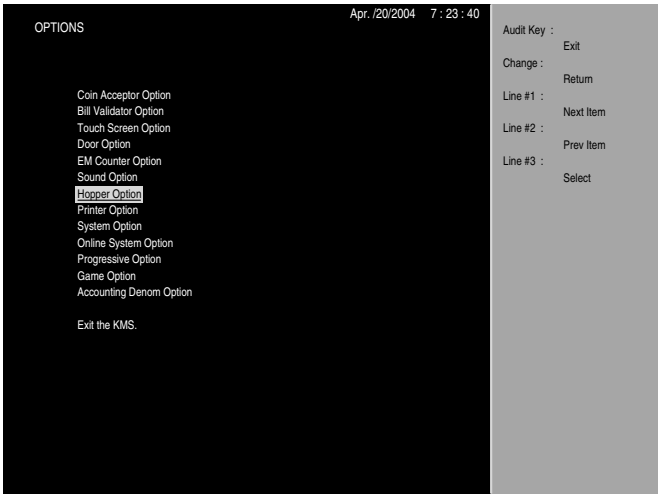

The **HOPPER OPTION** field is highlighted. Press the ***SELECT 3 LINES*** button to enter the selection. The following screen displays.

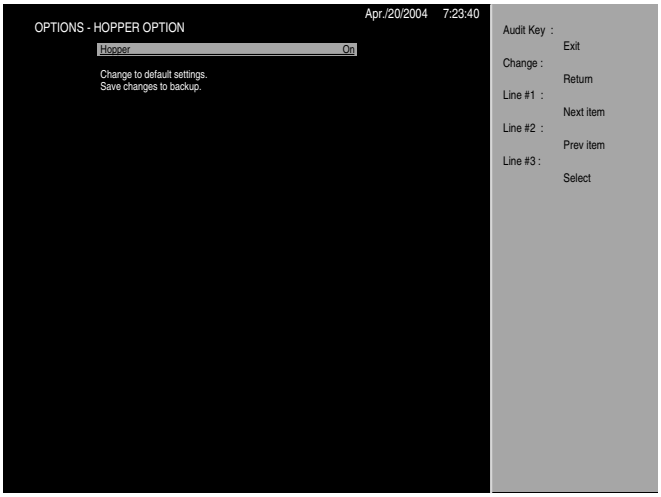

Setting Hopper On/Off

The **HOPPER ON/OFF** field is highlighted. Press the ***SELECT 3 LINES*** button to enter the selection. The following screen displays.

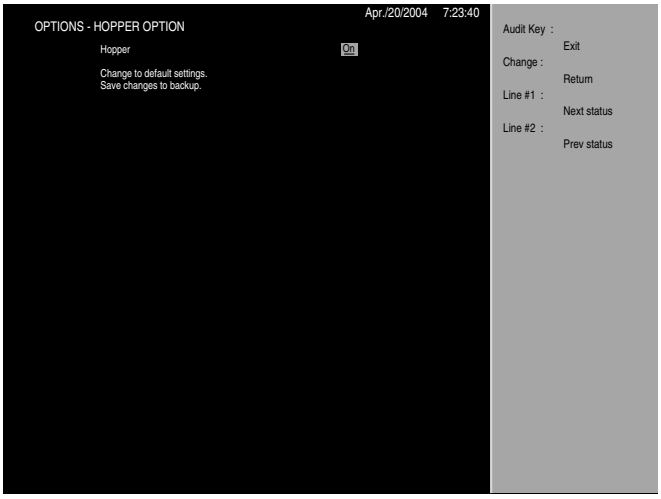

When setting up the value of the option, the audit key exits the K.M.S., the ***CHANGE*** button returns to the item select screen, the ***SELECT 1 LINE*** button selects the next status and the ***SELECT 2 LINES*** button selects the previous status. To accept the option of hopper "ON", press the ***CHANGE*** button to return to the hopper options screen. Press the ***CHANGE*** button to return to the main hopper option menu. Press the ***CHANGE*** button again to return to the main options menu. Press the ***SELECT 1 LINE*** button to tab to the **PRINTER OPTION** field. The following screen displays.

Printer Option

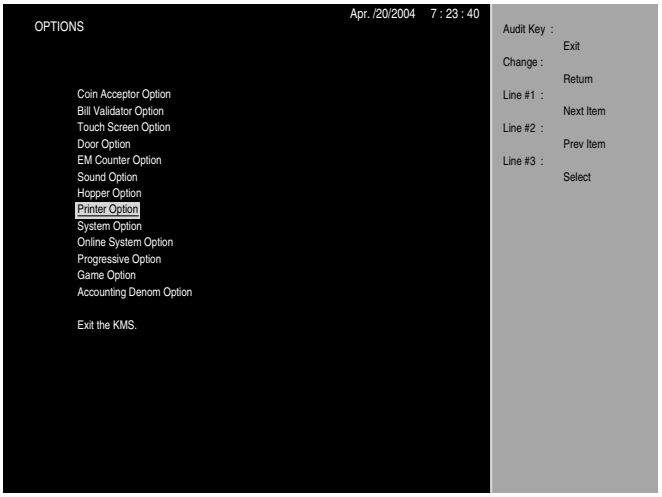

The **PRINTER OPTION** field is highlighted. Press the ***SELECT 3 LINES*** button to enter the selection. The following screen displays.

PRINTER OPTION	
Option	**Description**
Printer On/Off	OFF: Not used. ON: Printer enabled.
Printer Type	OFF: Not used. Seiko: Seiko Series PSA-66 ST used. Ithaca: Ithaca printer used.
Ticket-out Sound	OFF: No ticket out sound while ticket printing. ON: Play Ticket sound when the ticket is printing.

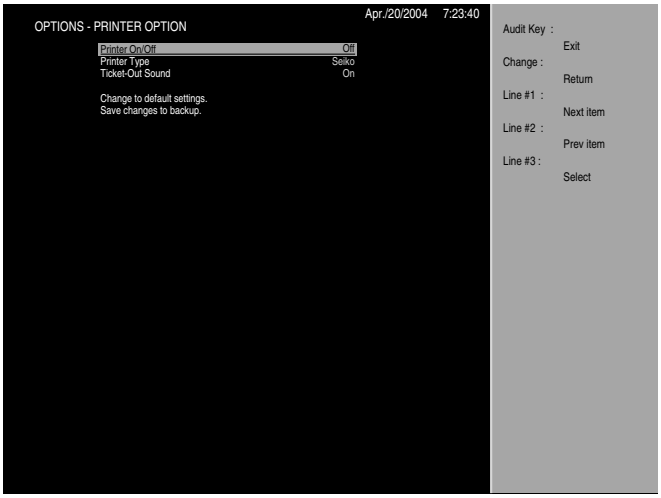

The audit key exits the K.M.S., the ***SELECT 1 LINE*** button moves to the next item and the ***SELECT 2 LINES*** button returns to the previous item and the ***SELECT 3 LINES*** enters the selection. The **PRINTER ON/OFF** field is highlighted. Press the ***SELECT 3 LINES*** button to enter the selection. The following screen displays.

Setting Printer ON/OFF

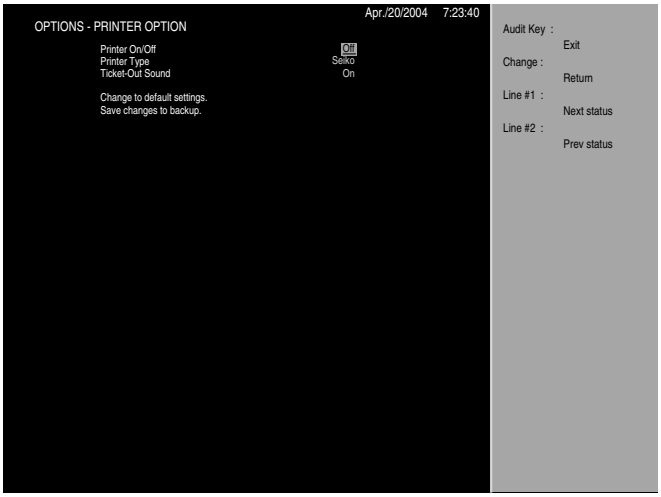

When setting up the value of the option, the audit key exits the K.M.S., the ***CHANGE*** button returns to the item select screen, the ***SELECT 1 LINE*** button selects the next status and the ***SELECT 2 LINES*** button selects the previous status. To set the option of printer to on, press the ***SELECT 1 LINE*** button to change the status to on. Press the ***CHANGE*** button to return to the main hopper options screen. Press the ***SELECT 1 LINE*** button to tab to the **PRINTER TYPE** field. The following screen displays.

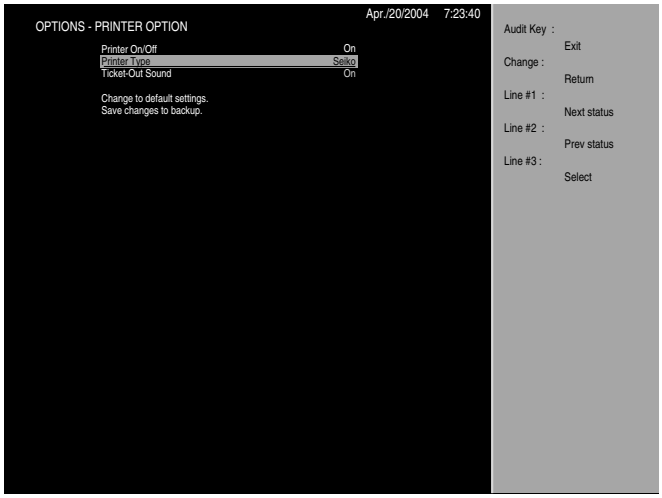

The audit key exits the K.M.S., the ***SELECT 1 LINE*** button moves to the next item and the ***SELECT 2 LINES*** button returns to the previous item and the ***SELECT 3 LINES*** enters the selection. The **PRINTER TYPE** field is highlighted. Press the ***SELECT 3 LINES*** button to enter the selection. The following screen displays.

Setting Printer Type

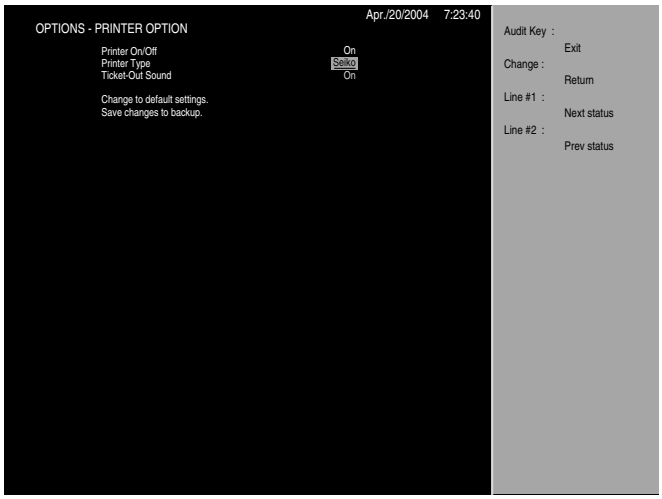

When setting up the value of the option, the audit key exits the K.M.S., the ***CHANGE*** button returns to the item select screen, the ***SELECT 1 LINE*** button selects the next status and the ***SELECT 2 LINES*** button selects the previous status. To set the type of printer to Ithaca, press the ***SELECT 1 LINE*** button to change the status. Press the ***CHANGE*** button to return to the main printer options screen. Press the ***SELECT 1 LINE*** button to tab to the **TICKET-OUT SOUND** field. The following screen displays.

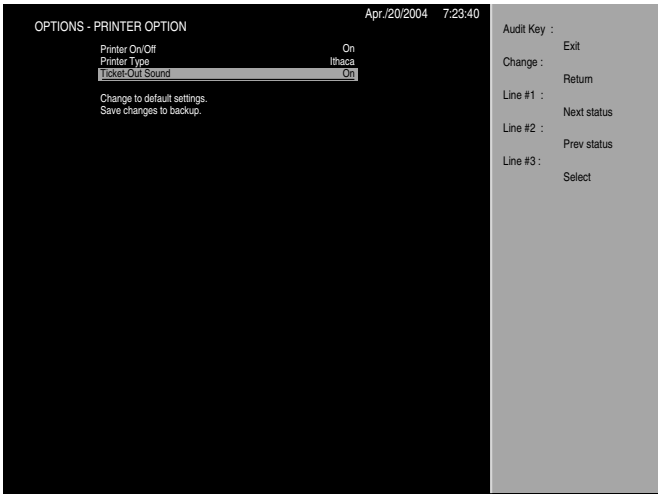

The audit key exits the K.M.S., the ***SELECT 1 LINE*** button moves to the next item and the ***SELECT 2 LINES*** button returns to the previous item and the ***SELECT 3 LINES*** enters the selection. The **TICKET-OUT SOUND** field is highlighted. Press the ***SELECT 3 LINES*** button to enter the selection. The following screen displays.

Setting Ticket-Out Sound

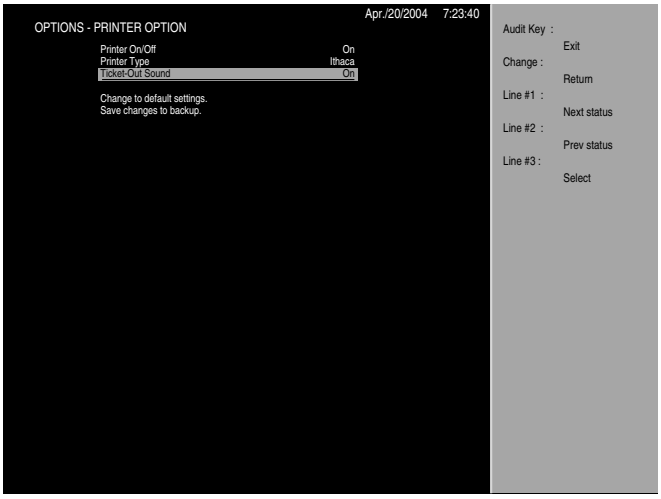

When setting up the value of the option, the audit key exits the K.M.S., the ***CHANGE*** button returns to the item select screen, the ***SELECT 1 LINE*** button selects the next status and the ***SELECT 2 LINES*** button selects the previous status. To accept the default ticket-out sound to "ON", press the ***CHANGE*** button to return to the main printer options screen. Press the ***CHANGE*** button again to return to the main options screen. Press the ***SELECT 1 LINE*** button to tab to the **SYSTEM OPTION** field. The following screen displays.

System Option

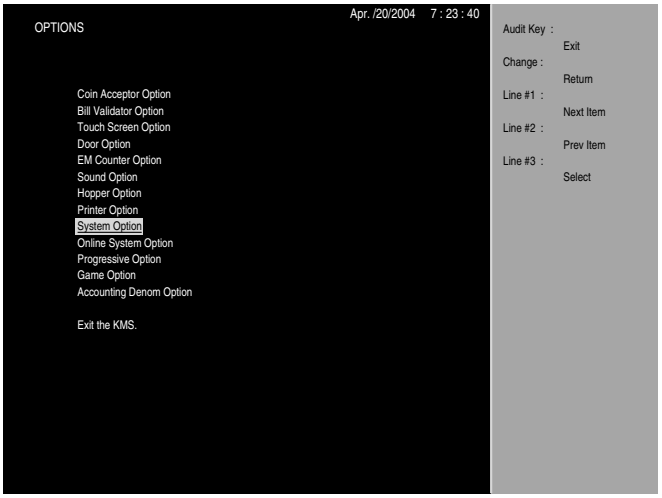

The **SYSTEM OPTION** field is highlighted. Press the ***SELECT 3 LINES*** button to enter the selection. The following screen displays.

SYSTEM OPTION	
Option	**Description**
Machine Number	Machine Serial Number.
Asset Number	Assert number of this machine.
Auto Cashout	OFF: Disabled. ON: Enabled.When enabled with credits on the credit meter and the machine is made disabled by host, the machine cashes out automatically.
Credit Intervention	OFF: Disabled. Credit up Only: Credit up is skipped by the intervention of the switch. Quick Play: Credit count skipped by pushing intervention key and next game starts automatically.
Allow Partial Pay	In Cashout, the machine will use hopper and/or ticket as cashout devices. If cashout amount is lager than cashout limit of each device and this option is enabled, the machine will cash out the amount with the device up to its limit. If disabled, the machine will not use the device.
Credit Limit	Maximum credit amount the machine can hold in the credit meter.
Machine Cashout Limt	Maximum payout for all devices.
Hopper Cash-out Limit	Maximum number of coins the machine can cash out in one cashout. The game will pay credits up to this limit and pay remaining credits by ticket (no limit). If this option is set at 0, the game will cash out player's credits by ticket.

SYSTEM OPTION	
Option	**Description**
Hopper Cash-out Limit 2	Maximum number of credit in coins the hopper will pay in a ticket system down condition. The game will pay credits up to this limit and pay remaining credits by handpay (attendant pay).
Reset Jackpot to Credit Meter	OFF: Disabled. ON: Enabled. When Jackpot over IRS Jackpot limit occurs, the machine locks up. If this option is enabled, the machine will pay the Jackpot to credit meter instead of handpay.
IRS Limit	If a single win reaches this amount, the machine locks up for jackpot handpay (typically $1200.00).
Reset Jackpot Limit	Any single win over this limit is not eligible for resetting jackpot to credit meter.
Player Denomination	Machine Denomination setting (5¢, 25¢, 50¢, $1, $2, $5). Two or more denominations can be configured even if Tokenization option is set to ON. Token denomination must be divisible by all denominations enabled. The game will report accounting meters in units of the smallest enabled denomination to the host. If 5¢ and 25¢ are enabled, the game will report in units of 5¢. If 2¢, 5¢, and 25¢ are enabled, the game will report in units of 1¢.
Default Game Denomination	The game will select the default denomination as current game denomination when an attract mode starts. If attract mode is disabled, the game will not select the default denomination automatically. This denomination MUST be set to ON in the player denomination list.
Tokenization	The game can be configured to include a tokenization residual credits removal game (Mini-Game). If this option is set to ON, and the game has credits less than the token denomination, the game offers a residual credits removal Mini-Game.
Token Denomination	Coin denomination is actually used in the machine. (5¢, 10¢, 25¢, 50¢, $1).
Residual Credit	Attendant Pay: Residual Credit paid by attendant. Residual Credit Game: The credit game starts when the residual credits remain. Player Selectable: Player can select the credit game when the residual credits remain.

System Options-Machine Number

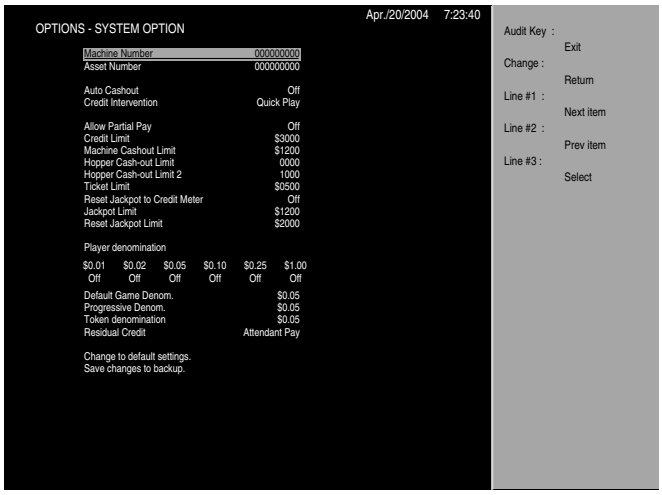

The audit key exits the K.M.S., the ***SELECT 1 LINE*** button moves to the next item and the ***SELECT 2 LINES*** button returns to the previous item and the ***SELECT 3 LINES*** enters the selection. The **MACHINE NUMBER** field is highlighted. Press the ***SELECT 3 LINES*** button to enter the selection. The following screen displays.

Setting Machine Number

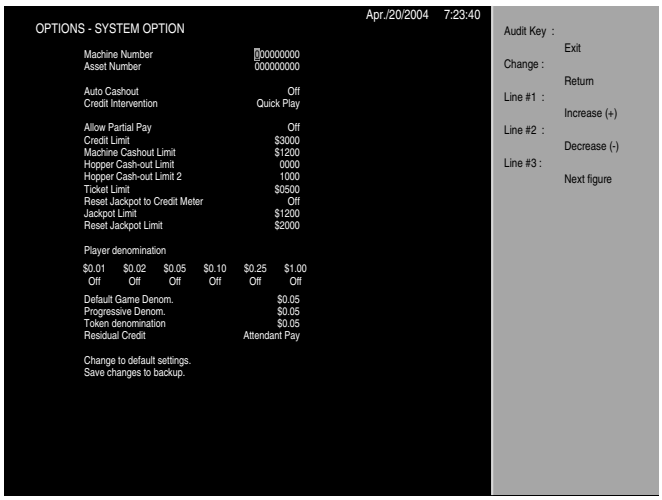

When setting up the value of the option, the audit key exits the K.M.S., the ***CHANGE*** button returns to the item select screen, the ***SELECT 1 LINE*** button increments the selection once for each time pressed and the ***SELECT 2 LINES*** button decrements the selection once for each time pressed. The ***SELECT 3 LINES*** button goes to the next figure. To set the machine number to 000000001, press the ***SELECT 3 LINES*** button to tab to the last figure. Press the ***SELECT 1 LINE*** button to increment the figure to 1. Press the ***CHANGE*** button to return to the system options screen. Press the ***SELECT 1 LINE*** button to tab to the **ASSET NUMBER** field. The following screen displays.

NOTE: Machine number is a nine character alphanumeric string. The SELECT 1 LINE button will increment from 0 to 9 and then through the alphabet.

System Options-Asset Number

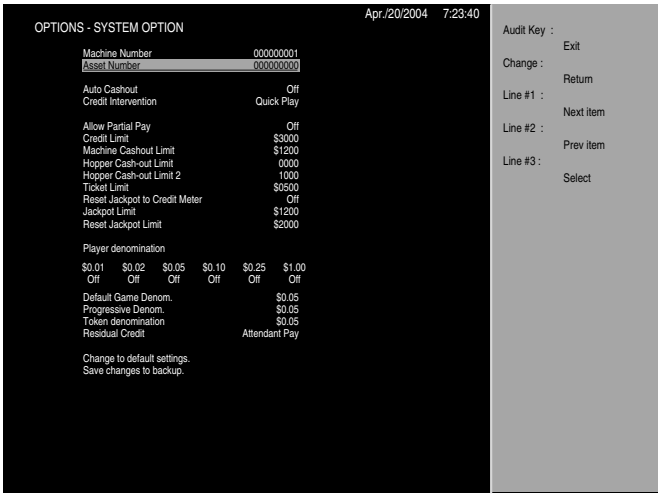

The audit key exits the K.M.S., the ***SELECT 1 LINE*** button moves to the next item and the ***SELECT 2 LINES*** button returns to the previous item and the ***SELECT 3 LINES*** enters the selection. The **ASSET NUMBER** field is highlighted. Press the ***SELECT 3 LINES*** button to enter the selection. The following screen displays.

Setting Asset Number

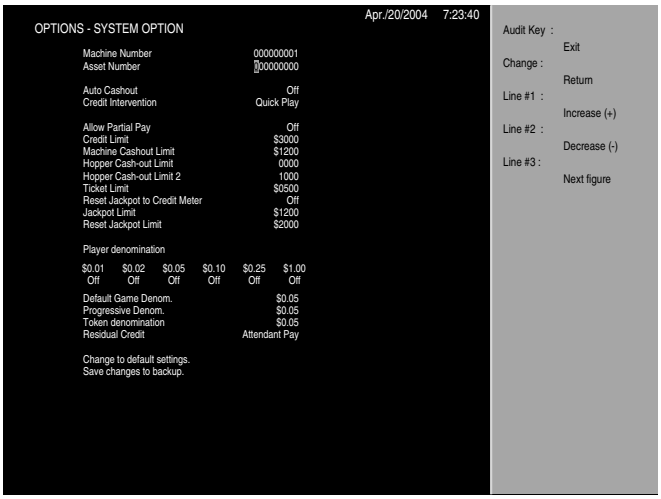

When setting up the value of the option, the audit key exits the K.M.S., the ***CHANGE*** button returns to the item select screen, the ***SELECT 1 LINE*** button increments the selection once for each time pressed and the ***SELECT 2 LINES*** button decrements the selection once for each time pressed. The ***SELECT 3 LINES*** button goes to the next figure. To set the machine number to 000000500, press the ***SELECT 3 LINES*** button to tab to the seventh figure. Press the ***SELECT 1 LINE*** button 5 times to increment the figure to 5. Press the ***CHANGE*** button to return to the system options screen. Press the ***SELECT 1 LINE*** button to tab to the **AUTO CASHOUT** field. The following screen displays.

NOTE: Asset number is a nine character numeric string. The SELECT 1 LINE button will increment from 0 to 9.

System Options-Auto Cashout

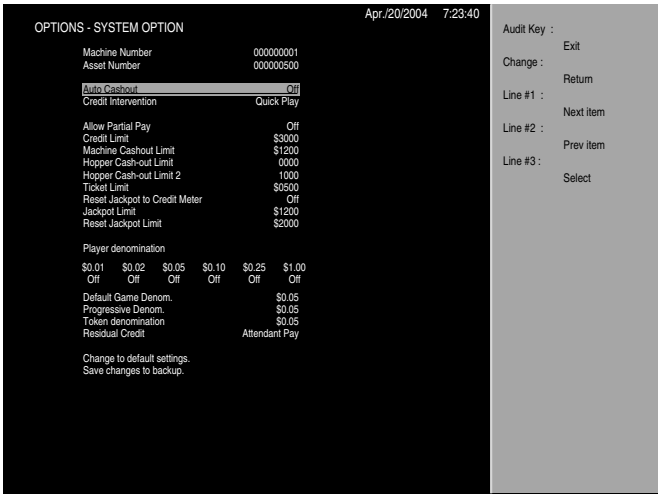

The audit key exits the K.M.S., the ***SELECT 1 LINE*** button moves to the next item, the ***SELECT 2 LINES*** button returns to the previous item and the ***SELECT 3 LINES*** enters the selection. The **AUTO CASHOUT** field is highlighted. Press the ***SELECT 3 LINES*** button to enter the selection. The following screen displays.

Setting Auto Cashout

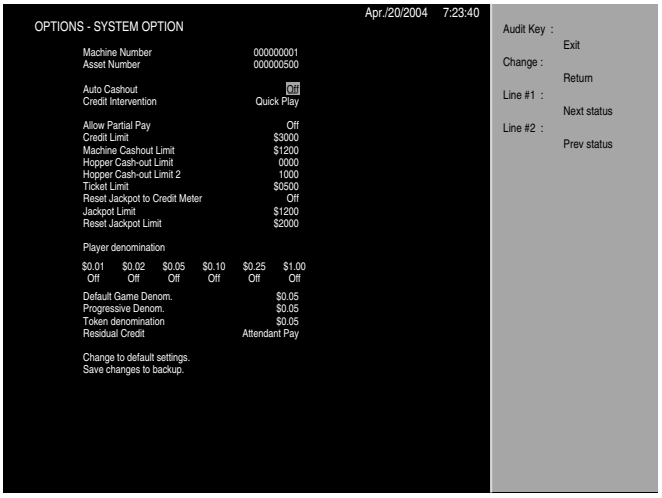

When setting up the value of the option, the audit key exits the K.M.S., the ***CHANGE*** button returns to the item select screen, the ***SELECT 1 LINE*** button selects the next status and the ***SELECT 2 LINES*** button selects the previous status. To change the default auto cashout to “ON”, press the ***SELECT 1 LINE*** button to change the status. Press the ***CHANGE*** button to return to the system options screen. Press the ***SELECT 1 LINE*** button to tab to the **CREDIT INTERVENTION** field. The following screen displays.

System Options-Credit Intervention

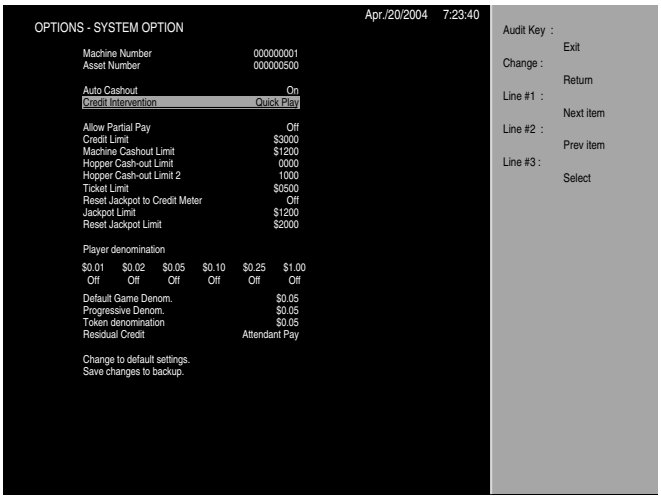

The audit key exits the K.M.S., the ***SELECT 1 LINE*** button moves to the next item, the ***SELECT 2 LINES*** button returns to the previous item and the ***SELECT 3 LINES*** enters the selection. The **CREDIT INTERVENTION** field is highlighted. Press the ***SELECT 3 LINES*** button to enter the selection. The following screen displays.

Setting Credit Intervention

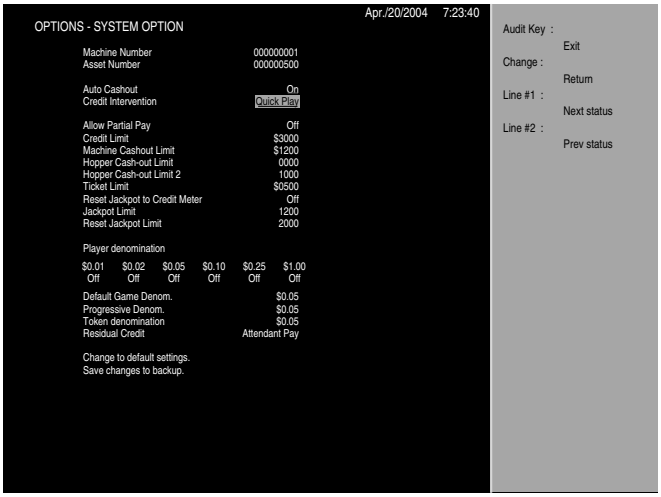

When setting up the value of the option, the audit key exits the K.M.S., the ***CHANGE*** button returns to the item select screen, the ***SELECT 1 LINE*** button selects the next status and the ***SELECT 2 LINES*** button selects the previous status. To change the default credit intervention to credit up only, press the ***SELECT 1 LINE*** button to change the status. Press the ***CHANGE*** button to return to the system options screen. Press the ***SELECT 1 LINE*** button to tab to the **ALLOW PARTIAL PAY** field. The following screen displays.

System Options-Allow Partial Pay

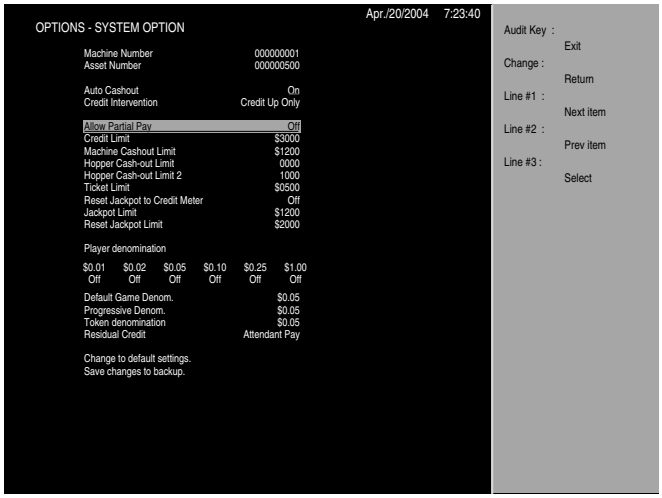

The audit key exits the K.M.S., the ***SELECT 1 LINE*** button moves the cursor to the next item, the ***SELECT 2 LINES*** button returns to the previous item and the ***SELECT 3 LINES*** enters the selection. The **ALLOW PARTIAL PAY** field is highlighted. Press the ***SELECT 3 LINES*** button to enter the selection. The following screen displays.

Setting Allow Partial Pay

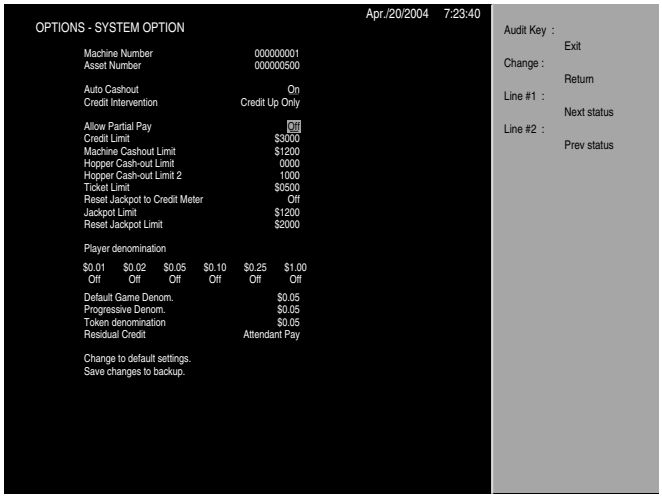

When setting up the value of the option, the audit key exits the K.M.S., the ***CHANGE*** button returns to the item select screen, the ***SELECT 1 LINE*** button selects the next status and the ***SELECT 2 LINES*** button selects the previous status. To change the default allow partial pay to “ON”, press the ***SELECT 1 LINE*** button to change the status. Press the ***CHANGE*** button to return to the system options screen. Press the ***SELECT 1 LINE*** button to tab to the **CREDIT LIMIT** field. The following screen displays.

System Options-Credit Limit

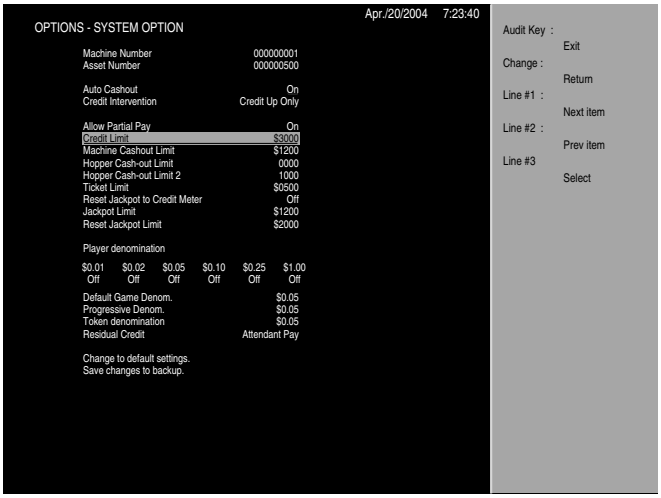

The audit key exits the K.M.S., the ***SELECT 1 LINE*** button moves the cursor to the next item, the ***SELECT 2 LINES*** button returns to the previous item and the ***SELECT 3 LINES*** enters the selection. The **CREDIT LIMIT** field is highlighted. Press the ***SELECT 3 LINES*** button to enter the selection. The following screen displays.

Setting Credit Limit

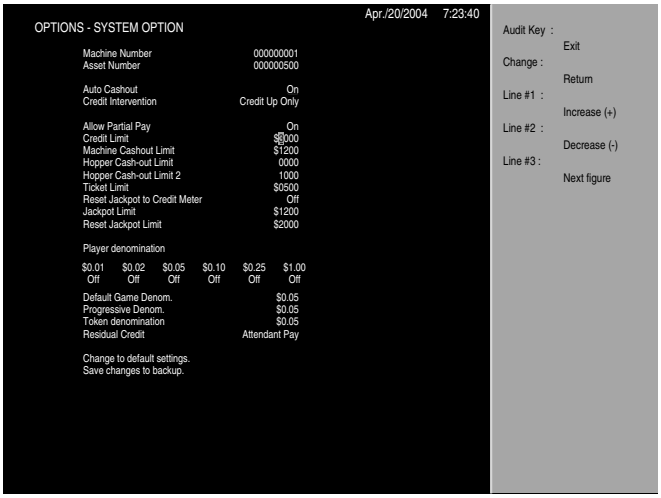

When setting up the value of the option, the audit key exits the K.M.S., the ***CHANGE*** button returns to the item select screen, the ***SELECT 1 LINE*** button increments the selection once for each time pressed and the ***SELECT 2 LINES*** button decrements the selection once for each time pressed. The ***SELECT 3 LINES*** button goes to the next figure. To accept the default value of $3000, press the ***CHANGE*** button to return to the system options screen. Press the ***SELECT 1 LINE*** button to tab to the **MACHINE CASHOUT LIMIT** field. The following screen displays.

System Options-Machine Cashout Limit

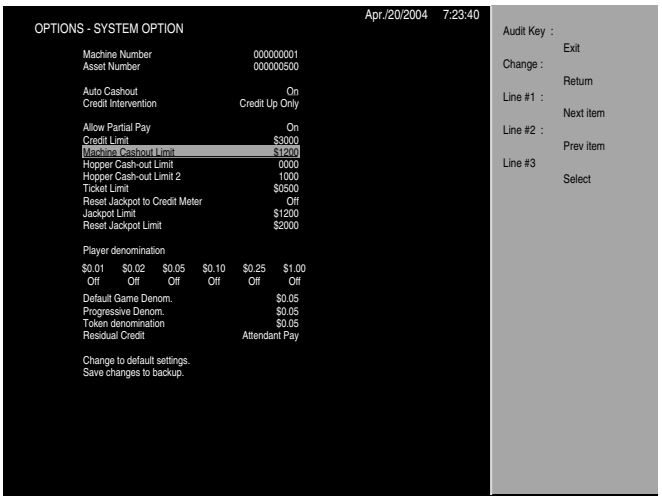

The audit key exits the K.M.S., the ***SELECT 1 LINE*** button moves the cursor to the next item, the ***SELECT 2 LINES*** button returns to the previous item and the ***SELECT 3 LINES*** enters the selection. The **HOPPER CASHOUT LIMIT** field is highlighted. Press the ***SELECT 3 LINES*** button to enter the selection. The following screen displays.

Setting Machine Cashout

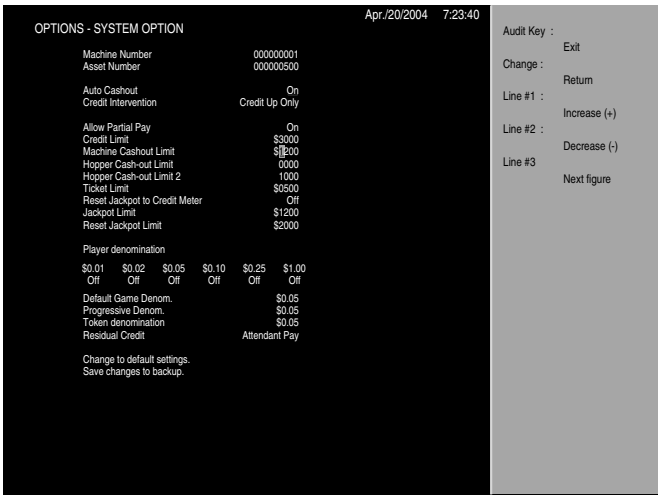

When setting up the value of the option, the audit key exits the K.M.S., the ***CHANGE*** button returns to the item select screen, the ***SELECT 1 LINE*** button increments the selection once for each time pressed and the ***SELECT 2 LINES*** button decrements the selection once for each time pressed. The ***SELECT 3 LINES*** button goes to the next figure. To accept the default value of $1200, press the ***CHANGE*** button to return to the system options screen. Press the ***SELECT 1 LINE*** button to tab to the **HOPPER CASHOUT LIMIT** field. The following screen displays.

System Options-Hopper Cashout Limit

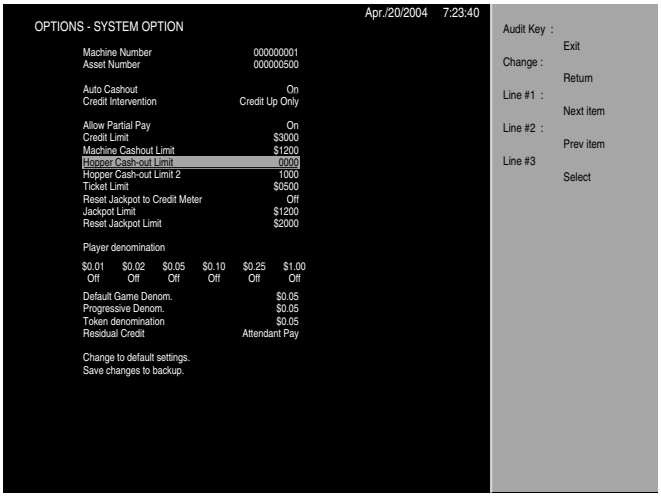

The audit key exits the K.M.S., the ***SELECT 1 LINE*** button moves the cursor to the next item, the ***SELECT 2 LINES*** button returns to the previous item and the ***SELECT 3 LINES*** enters the selection. The **HOPPER CASHOUT LIMIT** field is highlighted. Press the ***SELECT 3 LINES*** button to enter the selection. The following screen displays.

Setting Hopper Cashout Limit

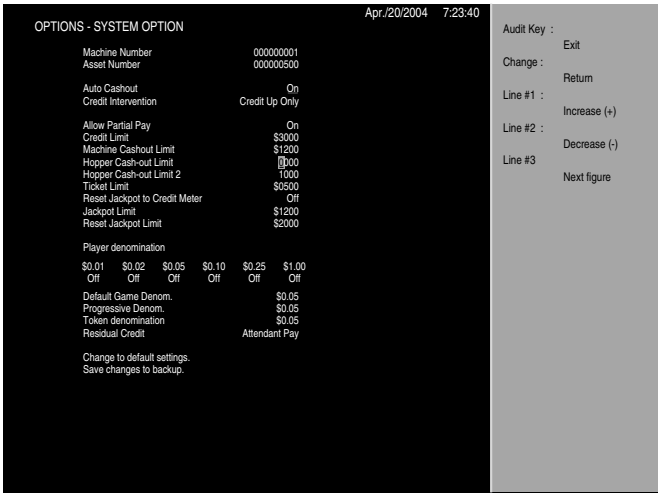

When setting up the value of the option, the audit key exits the K.M.S., the ***CHANGE*** button returns to the item select screen, the ***SELECT 1 LINE*** button increments the selection once for each time pressed and the ***SELECT 2 LINES*** button decrements the selection once for each time pressed. The ***SELECT 3 LINES*** button goes to the next figure. To accept the default value of 0000, press the ***CHANGE*** button to return to the system options screen. Press the ***SELECT 1 LINE*** button to tab to the **HOPPER CASHOUT LIMIT 2** field. The following screen displays.

System Options-Hopper Cashout Limit 2

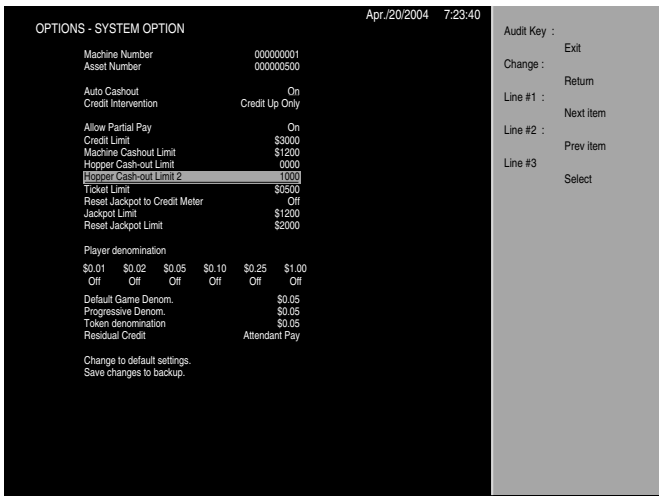

The audit key exits the K.M.S., the ***SELECT 1 LINE*** button moves the cursor to the next item, the ***SELECT 2 LINES*** button returns to the previous item and the ***SELECT 3 LINES*** enters the selection. The **HOPPER CASHOUT LIMIT 2** field is highlighted. Press the ***SELECT 3 LINES*** button to enter the selection. The following screen displays.

Setting Hopper Cashout Limit 2

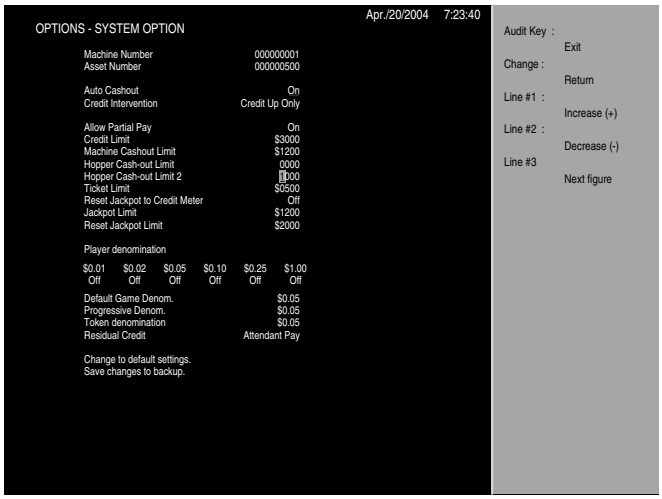

When setting up the value of the option, the audit key exits the K.M.S., the ***CHANGE*** button returns to the item select screen, the ***SELECT 1 LINE*** button increments the selection once for each time pressed and the ***SELECT 2 LINES*** button decrements the selection once for each time pressed. The ***SELECT 3 LINES*** button goes to the next figure. To accept the default value of 1000, press the ***CHANGE*** button to return to the system options screen. Press the ***SELECT 1 LINE*** button to tab to the **TICKET LIMIT** field. The following screen displays.

System Options-Ticket Limit

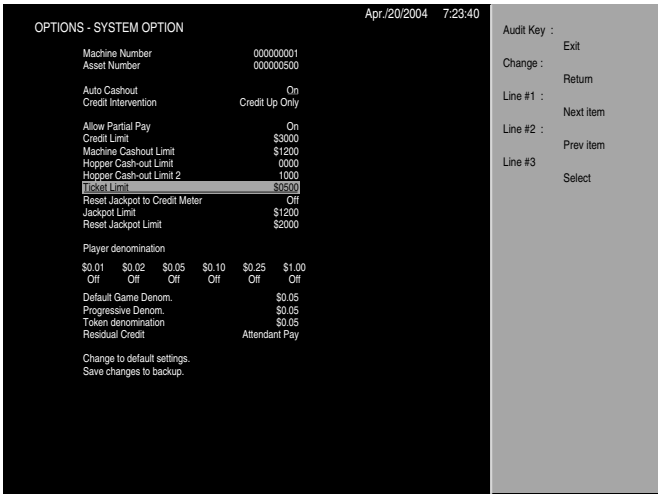

The audit key exits the K.M.S., the ***SELECT 1 LINE*** button moves the cursor to the next item, the ***SELECT 2 LINES*** button returns to the previous item and the ***SELECT 3 LINES*** enters the selection. The **TICKET LIMIT** field is highlighted. Press the ***SELECT 3 LINES*** button to enter the selection. The following screen displays.

Setting Ticket Limit

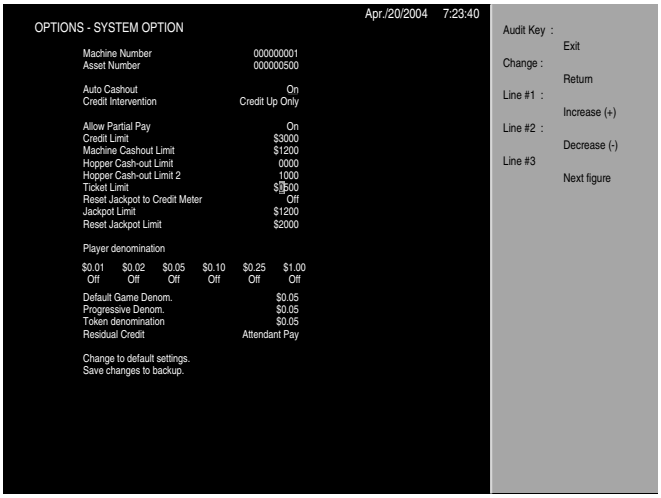

When setting up the value of the option, the audit key exits the K.M.S., the ***CHANGE*** button returns to the item select screen, the ***SELECT 1 LINE*** button increments the selection once for each time pressed and the ***SELECT 2 LINES*** button decrements the selection once for each time pressed. The ***SELECT 3 LINES*** button goes to the next figure. To accept the default value of 0500, press the ***CHANGE*** button to return to the system options screen. Press the ***SELECT 1 LINE*** button to tab to the **RESET JACKPOT TO CREDIT METER** field. The following screen displays.

System Options-Reset Jackpot To Credit Meter

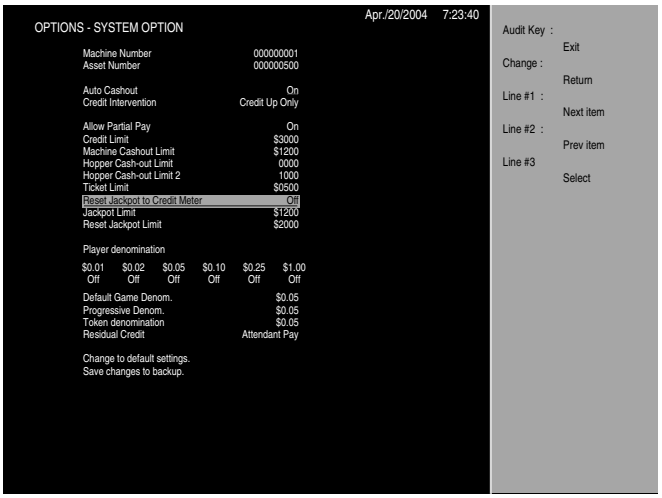

The audit key exits the K.M.S., the ***SELECT 1 LINE*** button moves the cursor to the next item, the ***SELECT 2 LINES*** button returns to the previous item and the ***SELECT 3 LINES*** enters the selection. The **RESET JACKPOT TO CREDIT METER** field is highlighted. Press the ***SELECT 3 LINES*** button to enter the selection. The following screen displays.

Setting Reset Jackpot To Credit Meter

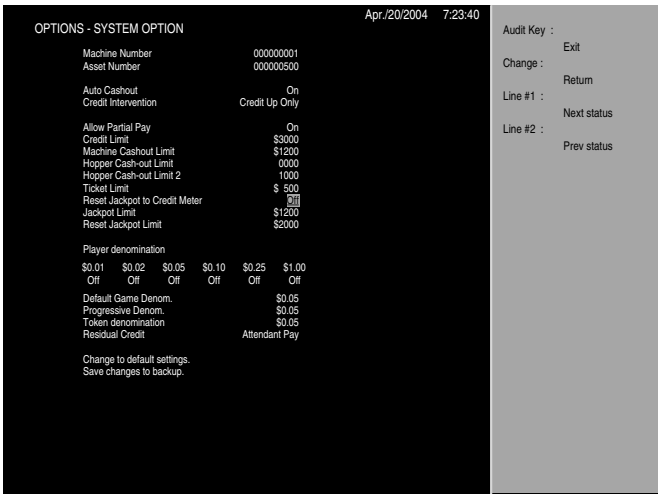

When setting up the value of the option, the audit key exits the K.M.S., the ***CHANGE*** button returns to the item select screen, the ***SELECT 1 LINE*** button selects the next status and the ***SELECT 2 LINES*** button selects the previous status. To change the default reset jackpot to credit meter to “ON”, press the ***SELECT 1 LINE*** button to change the status. Press the ***CHANGE*** button to return to the system options screen. Press the ***SELECT 1 LINE*** button to tab to the **JACKPOT LIMIT** field. The following screen displays.

System Options-Jackpot Limit

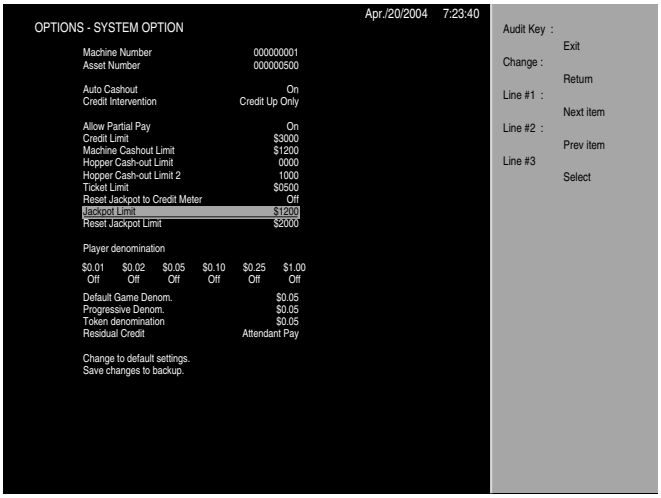

The audit key exits the K.M.S., the ***SELECT 1 LINE*** button moves the cursor to the next item, the ***SELECT 2 LINES*** button returns to the previous item and the ***SELECT 3 LINES*** enters the selection. The **JACKPOT LIMIT** field is highlighted. Press the ***SELECT 3 LINES*** button to enter the selection. The following screen displays.

Setting Jackpot Limit

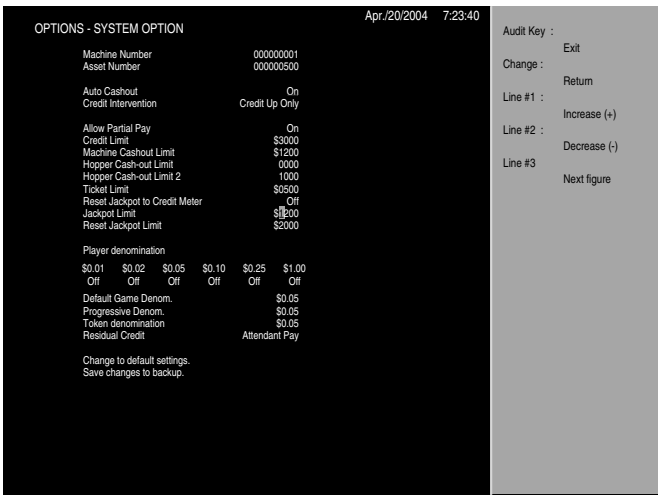

When setting up the value of the option, the audit key exits the K.M.S., the ***CHANGE*** button returns to the item select screen, the ***SELECT 1 LINE*** button increments the selection once for each time pressed and the ***SELECT 2 LINES*** button decrements the selection once for each time pressed. The ***SELECT 3 LINES*** button goes to the next figure. To accept the default value of $1200, press the ***CHANGE*** button to return to the system options screen. Press the ***SELECT 1 LINE*** button to tab to the **RESET JACKPOT LIMIT** field. The following screen displays.

System Options-Reset Jackpot Limit

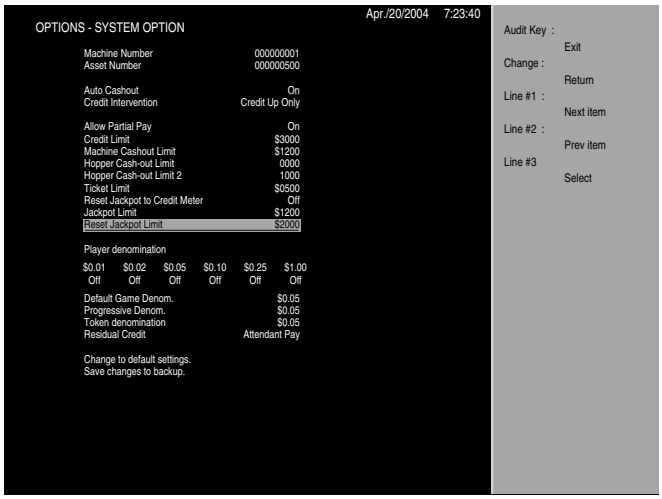

The audit key exits the K.M.S., the ***SELECT 1 LINE*** button moves the cursor to the next item, the ***SELECT 2 LINES*** button returns to the previous item and the ***SELECT 3 LINES*** enters the selection. The **RESET JACKPOT LIMIT** field is highlighted. Press the ***SELECT 3 LINES*** button to enter the selection. The following screen displays.

Setting Reset Jackpot Limit

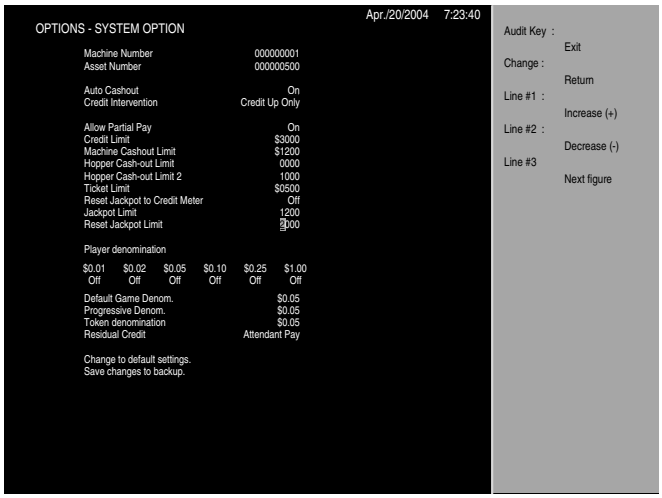

When setting up the value of the option, the audit key exits the K.M.S., the ***CHANGE*** button returns to the item select screen, the ***SELECT 1 LINE*** button increments the selection once for each time pressed and the ***SELECT 2 LINES*** button decrements the selection once for each time pressed. The ***SELECT 3 LINES*** button goes to the next figure. To accept the default value of $2000, press the ***CHANGE*** button to return to the system options screen. Press the ***SELECT 1 LINE*** button to tab to the **PLAYER DENOMINATION $0.01** field. The following screen displays.

 © 2004 KONAMI GAMING

System Options-Player Denomination $0.01

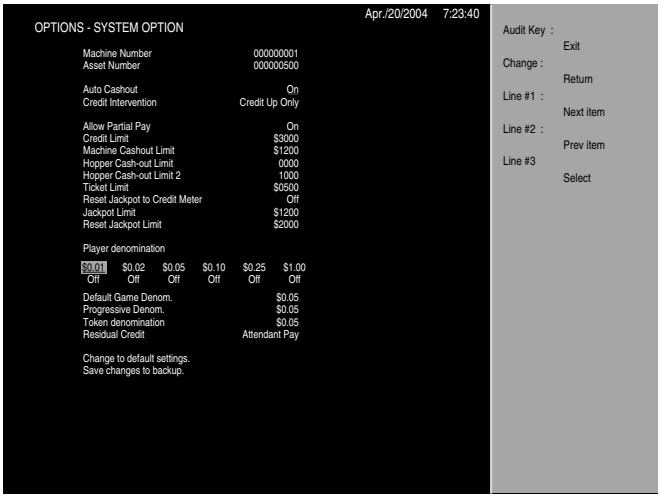

The audit key exits the K.M.S., the ***SELECT 1 LINE*** button moves the cursor to the next item, the ***SELECT 2 LINES*** button returns to the previous item and the ***SELECT 3 LINES*** enters the selection. The **PLAYER DENOMINATION $0.01** field is highlighted. Press the ***SELECT 3 LINES*** button to enter the selection. The following screen displays.

System Options-Player Denomination $0.02

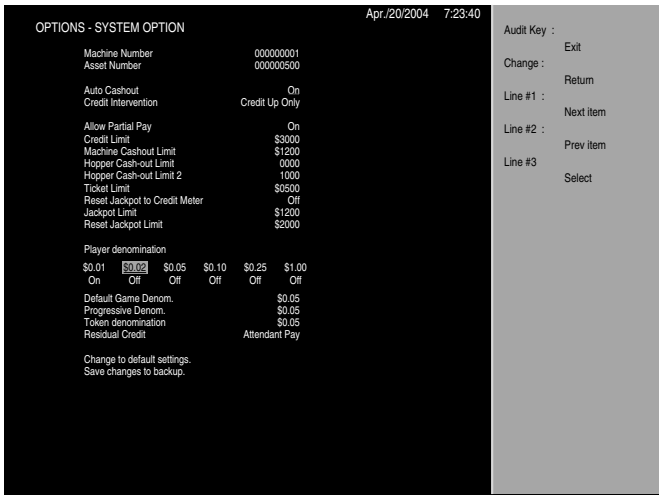

The audit key exits the K.M.S., the ***SELECT 1 LINE*** button moves the cursor to the next item, the ***SELECT 2 LINES*** button returns to the previous item and the ***SELECT 3 LINES*** enters the selection. The **PLAYER DENOMINATION $0.02** field is highlighted. Press the ***SELECT 3 LINES*** button to enter the selection. The following screen displays.

Setting Player Denomination $0.01 On/Off

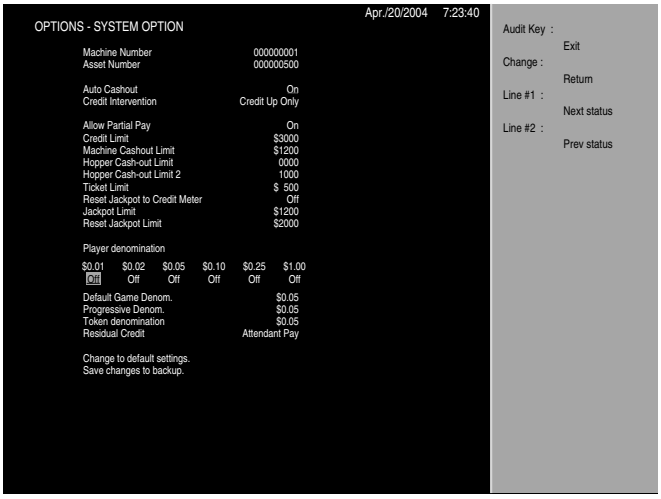

When setting up the value of the option, the audit key exits the K.M.S., the ***CHANGE*** button returns to the item select screen, the ***SELECT 1 LINE*** button selects the next status and the ***SELECT 2 LINES*** button selects the previous status. To change the default player denomination $0.01 to "ON", press the ***SELECT 1 LINE*** button to change the status. Press the ***CHANGE*** button to return to the system options screen. Press the ***SELECT 1 LINE*** button to tab to the **PLAYER DENOMINATION $0.02** field. The following screen displays.

Setting Player Denomination $0.02 On/Off

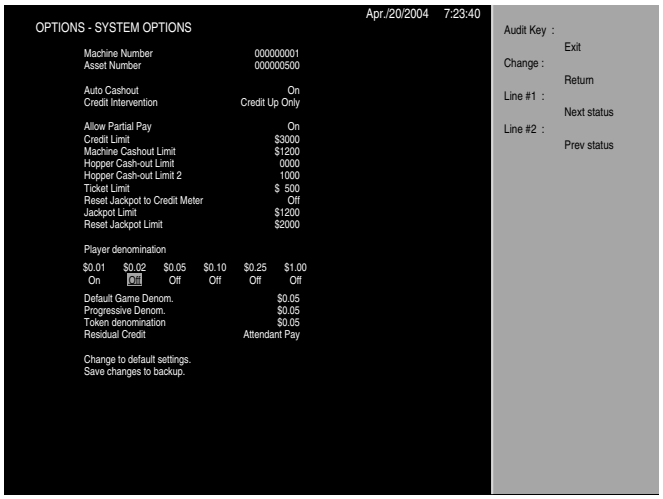

When setting up the value of the option, the audit key exits the K.M.S., the ***CHANGE*** button returns to the item select screen, the ***SELECT 1 LINE*** button selects the next status and the ***SELECT 2 LINES*** button selects the previous status. To change the default player denomination $0.02 to "ON", press the ***SELECT 1 LINE*** button to change the status. Press the ***CHANGE*** button to return to the system options screen. Press the ***SELECT 1 LINE*** button to tab to the **PLAYER DENOMINATION $0.05** field. The following screen displays.

System Options-Player Denomination $0.05

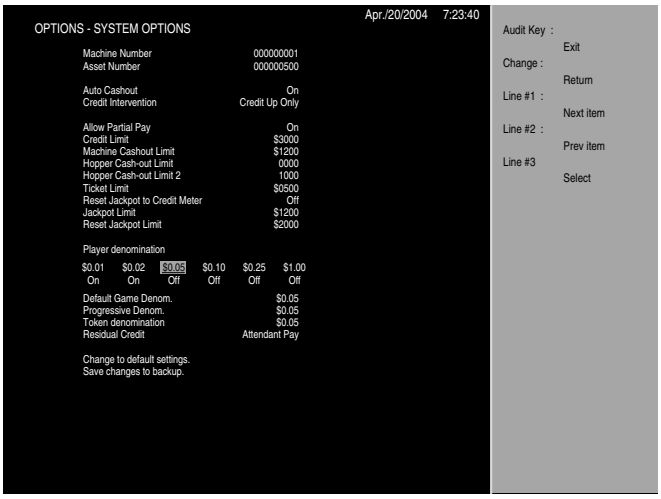

The audit key exits the K.M.S., the ***SELECT 1 LINE*** button moves the cursor to the next item, the ***SELECT 2 LINES*** button returns to the previous item and the ***SELECT 3 LINES*** enters the selection. The **PLAYER DENOMINATION $0.05** field is highlighted. Press the ***SELECT 3 LINES*** button to enter the selection. The following screen displays.

Setting Player Denomination $0.05 On/Off

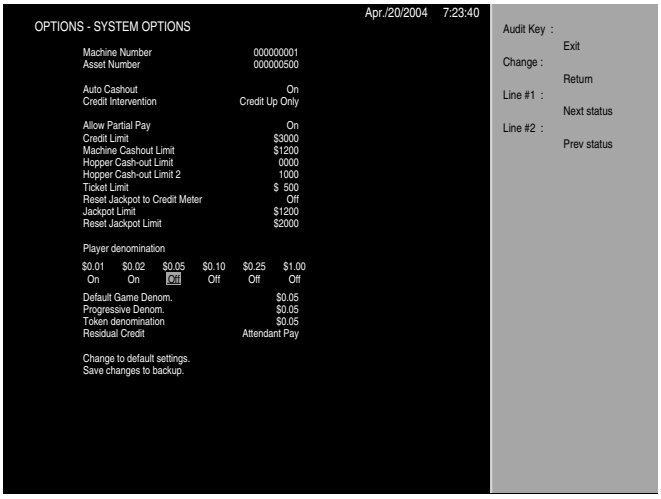

When setting up the value of the option, the audit key exits the K.M.S., the ***CHANGE*** button returns to the item select screen, the ***SELECT 1 LINE*** button selects the next status and the ***SELECT 2 LINES*** button selects the previous status. To change the default player denomination $0.05 to "ON", press the ***SELECT 1 LINE*** button to change the status. Press the ***CHANGE*** button to return to the system options screen. Press the ***SELECT 1 LINE*** button to tab to the **PLAYER DENOMINATION $0.10** field. The following screen displays.

System Options-Player Denomination $0.10

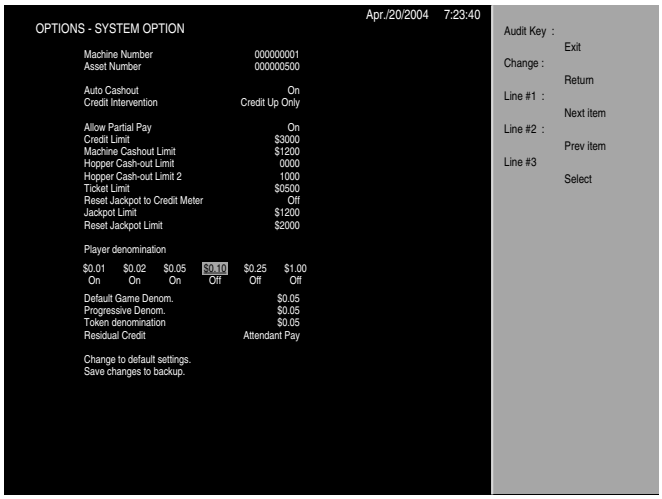

The audit key exits the K.M.S., the ***SELECT 1 LINE*** button moves the cursor to the next item, the ***SELECT 2 LINES*** button returns to the previous item and the ***SELECT 3 LINES*** enters the selection. The **PLAYER DENOMINATION $0.10** field is highlighted. Press the ***SELECT 3 LINES*** button to enter the selection. The following screen displays.

Setting Player Denomination $0.10 On/Off

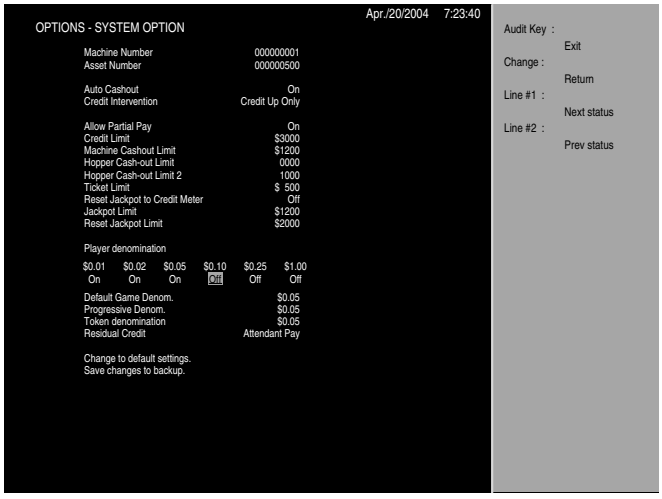

When setting up the value of the option, the audit key exits the K.M.S., the ***CHANGE*** button returns to the item select screen, the ***SELECT 1 LINE*** button selects the next status and the ***SELECT 2 LINES*** button selects the previous status. To change the default player denomination $0.10 to "ON", press the ***SELECT 1 LINE*** button to change the status. Press the ***CHANGE*** button to return to the system options screen. Press the ***SELECT 1 LINE*** button to tab to the **PLAYER DENOMINATION $0.25** field. The following screen displays.

System Options-Player Denomination $0.25

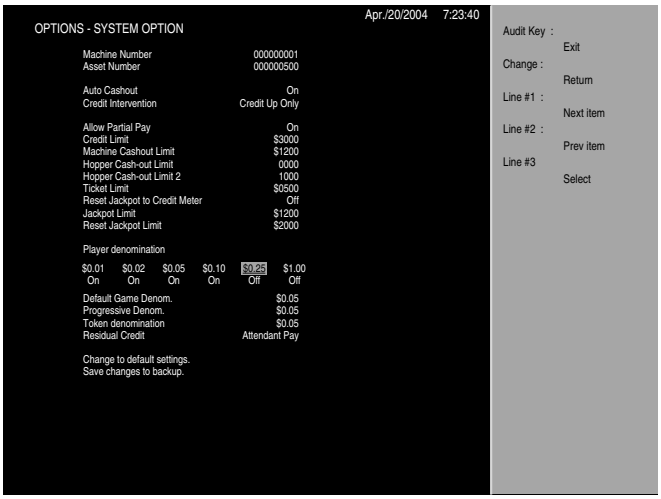

The audit key exits the K.M.S., the ***SELECT 1 LINE*** button moves the cursor to the next item, the ***SELECT 2 LINES*** button returns to the previous item and the ***SELECT 3 LINES*** enters the selection. The **PLAYER DENOMINATION $0.25** field is highlighted. Press the ***SELECT 3 LINES*** button to enter the selection. The following screen displays.

System Options-Player Denomination $1.00

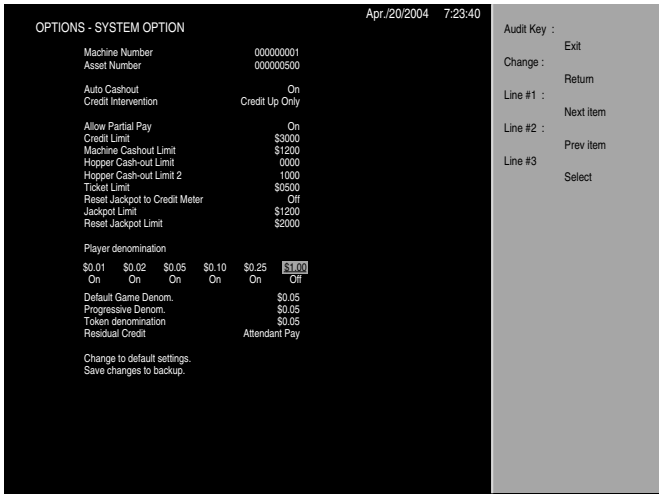

The audit key exits the K.M.S., the ***SELECT 1 LINE*** button moves the cursor to the next item, the ***SELECT 2 LINES*** button returns to the previous item and the ***SELECT 3 LINES*** enters the selection. The **PLAYER DENOMINATION $1.00** field is highlighted. Press the ***SELECT 3 LINES*** button to enter the selection. The following screen displays.

Setting Player Denomination $0.25 On/Off

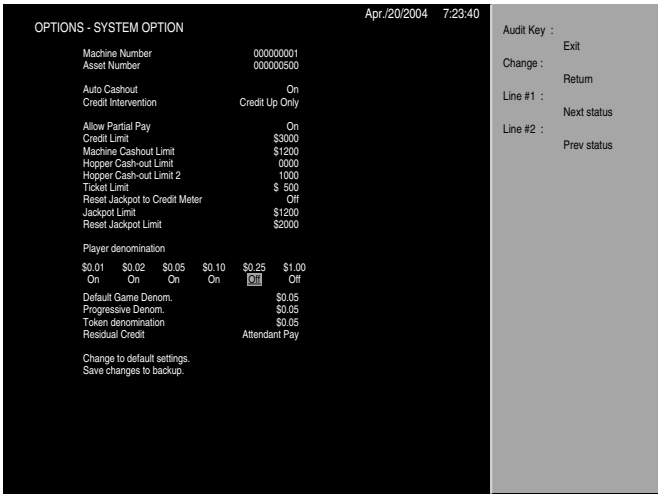

When setting up the value of the option, the audit key exits the K.M.S., the ***CHANGE*** button returns to the item select screen, the ***SELECT 1 LINE*** button selects the next status and the ***SELECT 2 LINES*** button selects the previous status. To change the default player denomination $0.25 to "ON", press the ***SELECT 1 LINE*** button to change the status. Press the ***CHANGE*** button to return to the system options screen. Press the ***SELECT 1 LINE*** button to tab to the **PLAYER DENOMINATION $1.00** field. The following screen displays.

Setting Player Denomination $1.00 On/Off

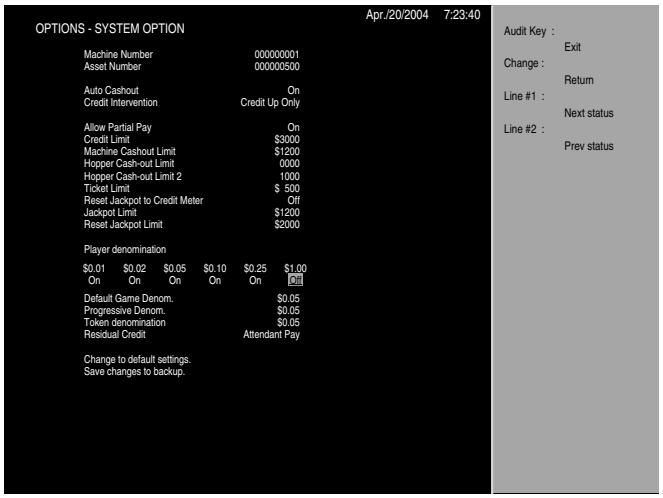

When setting up the value of the option, the audit key exits the K.M.S., the ***CHANGE*** button returns to the item select screen, the ***SELECT 1 LINE*** button selects the next status and the ***SELECT 2 LINES*** button selects the previous status. To change the default player denomination $1.00 to "ON", press the ***SELECT 1 LINE*** button to change the status. Press the ***CHANGE*** button to return to the system options screen. Press the ***SELECT 1 LINE*** button to tab to the **DEFAULT GAME DENOM.** field. The following screen displays.

System Options-Default Game Denom.

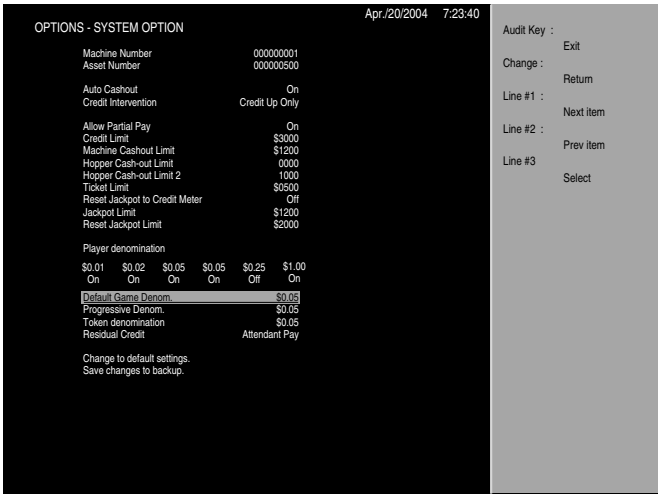

The audit key exits the K.M.S., the ***SELECT 1 LINE*** button moves the cursor to the next item, the ***SELECT 2 LINES*** button returns to the previous item and the ***SELECT 3 LINES*** enters the selection. The **DEFAULT GAME DENOM.** field is highlighted. Press the ***SELECT 3 LINES*** button to enter the selection. The following screen displays.

Setting Default Game Denom.

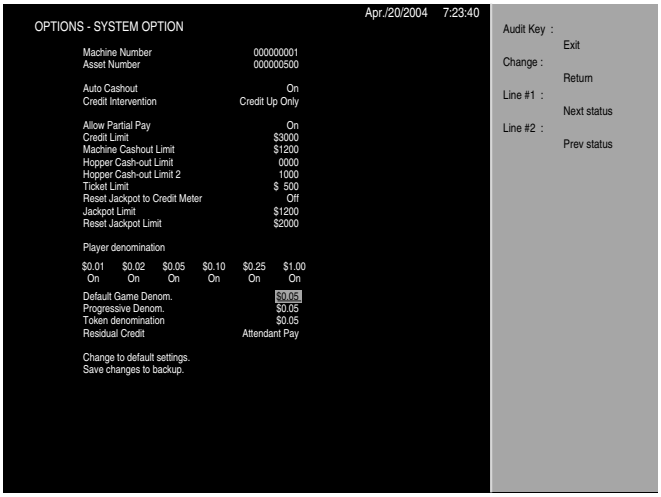

When setting up the value of the option, the audit key exits the K.M.S., the ***CHANGE*** button returns to the item select screen, the ***SELECT 1 LINE*** button selects the next status and the ***SELECT 2 LINES*** button selects the previous status. To change the default progressive denomination to 25¢, press the ***SELECT 1 LINE*** button to change the status. Press the ***CHANGE*** button to return to the system options screen. Press the ***SELECT 1 LINE*** button to tab to the **TOKEN DENOMINATION** field. The following screen displays.

System Options-Progressive Denom.

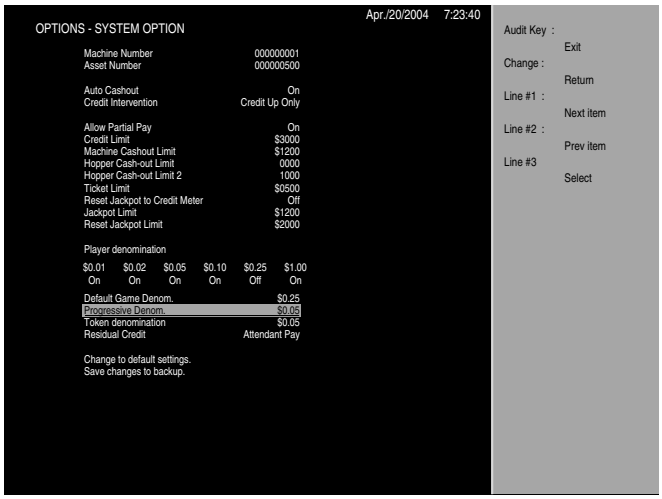

The audit key exits the K.M.S., the ***SELECT 1 LINE*** button moves to the next item, the ***SELECT 2 LINES*** button returns to the previous item and the ***SELECT 3 LINES*** enters the selection. The **PROGRESSIVE DENOM.** field is highlighted. Press the ***SELECT 3 LINES*** button to enter the selection. The following screen displays.

Setting Progressive Denom.

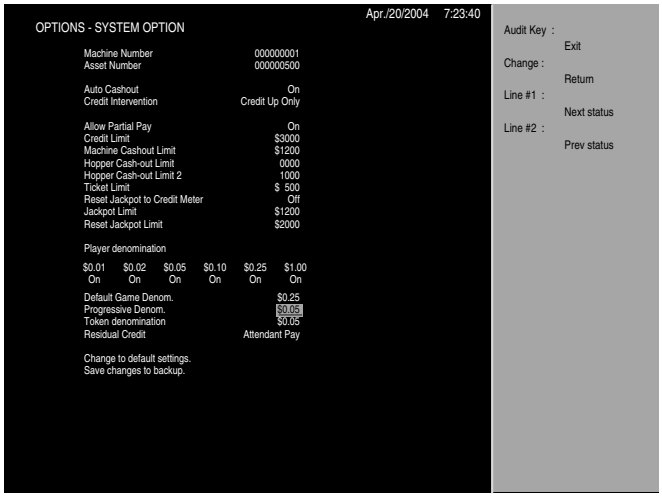

When setting up the value of the option, the audit key exits the K.M.S., the ***CHANGE*** button returns to the item select screen, the ***SELECT 1 LINE*** button selects the next status and the ***SELECT 2 LINES*** button selects the previous status. To change the default progressive denomination to 25¢, press the ***SELECT 1 LINE*** button to change the status to 25¢. Press the ***CHANGE*** button to return to the system options screen. Press the ***SELECT 1 LINE*** button to tab to the **TOKEN DENOMINATION** field. The following screen displays.

System Options-Token Denomination

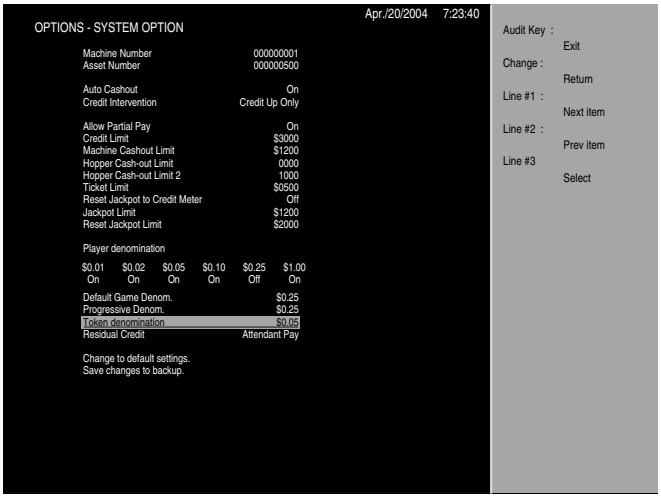

The audit key exits the K.M.S., the ***SELECT 1 LINE*** button moves to the next item, the ***SELECT 2 LINES*** button returns to the previous item and the ***SELECT 3 LINES*** enters the selection. The **TOKEN DENOMINATION** field is highlighted. Press the ***SELECT 3 LINES*** button to enter the selection. The following screen displays.

Setting Token Denomination

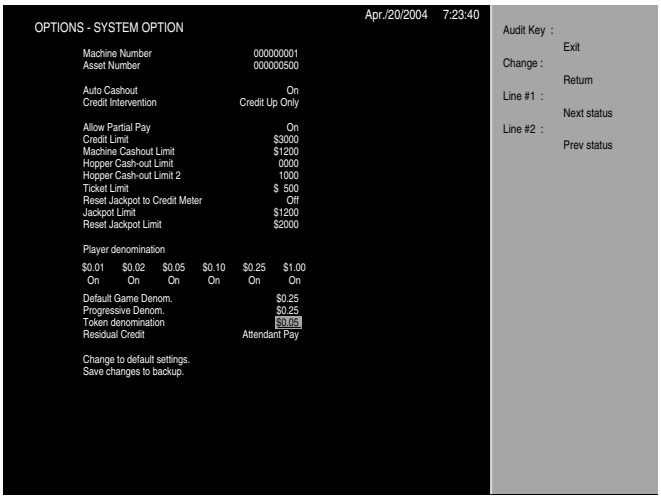

When setting up the value of the option, the audit key exits the K.M.S., the ***CHANGE*** button returns to the item select screen, the ***SELECT 1 LINE*** button selects the next status and the ***SELECT 2 LINES*** button selects the previous status. To change the default token denomination to 25¢, press the ***SELECT 1 LINE*** button to change the status to 25¢. Press the ***CHANGE*** button to return to the system options screen. Press the ***SELECT 1 LINE*** button to tab to the **RESIDUAL CREDIT** field. The following screen displays.

System Options-Residual Credit

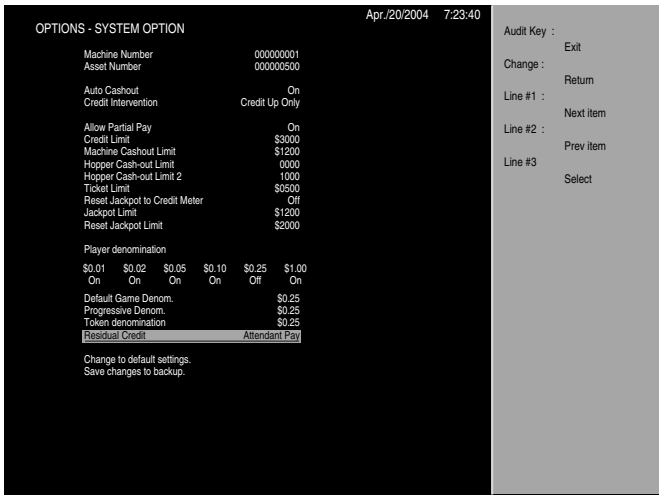

The audit key exits the K.M.S., the ***SELECT 1 LINE*** button moves to the next item, the ***SELECT 2 LINES*** button returns to the previous item and the ***SELECT 3 LINES*** enters the selection. The **RESIDUAL CREDIT** field is highlighted. Press the ***SELECT 3 LINES*** button to enter the selection. The following screen displays.

Setting Residual Credit

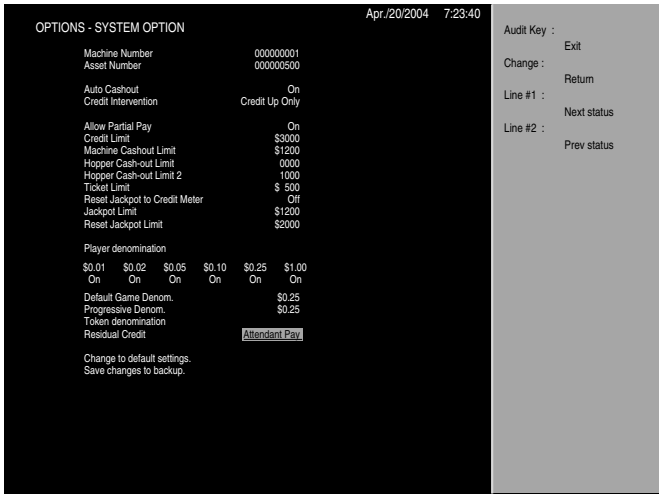

When setting up the value of the option, the audit key exits the K.M.S., the ***CHANGE*** button returns to the item select screen, the ***SELECT 1 LINE*** button selects the next status and the ***SELECT 2 LINES*** button selects the previous status. To change the default residual credit to residual credit game, press the ***SELECT 1 LINE*** button to change the status to residual credit game. Press the ***CHANGE*** button to return to the system options screen. Press the ***CHANGE*** button again to return to the main options screen. Press the ***SELECT 1 LINE*** button to tab to the **ONLINE SYSTEM OPTIONS** field. The following screen displays.

Online System Option

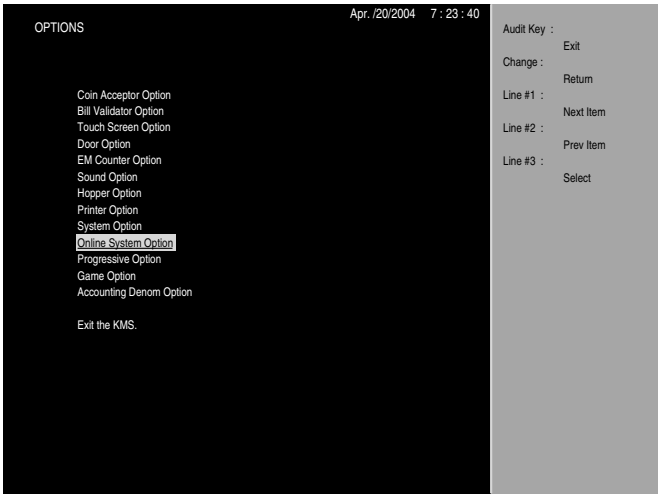

The **ONLINE SYSTEM OPTION** field is highlighted. Press the ***SELECT 3 LINES*** button to enter the selection. The following screen displays.

ONLINE SYSTEM OPTION	
Option	**Description**
Port 1-3 Protocol	OFF: This communication port is not used. SAS: Perform SAS communication protocol. SDS: Perform SDS communication protocol. MIKOHN: Perform MIKOHN communication protocol.
Port 1-3 Address	The machine address for each port.
Lock Up	OFF: Disabled. ON: Host can lock up Machine.
Tickets/Voucher:Ticket port	OFF: Ticket validation function is not used. Port1-3: The communication port which the machine can perform a host command related ticket validation.
Tickets/Voucher:Coupon port	OFF: Ticket validation function is not used. Port1-3: The communication port which the machine can perform a host command related ticket validation.
Tickets/Voucher:Validation scheme	Enhanced: Use enhanced validation mode. Host: Use host validation mode.
Tickets/Voucher:Print receipts	OFF: Jackpot reset will not print jackpot receipt. ON: Jackpot reset will print jackpot receipt.
Machine Control:Port number	OFF: Machine Control function is not used. Port1-3: The communication port which the machine can perform a host command related Machine Control.

ONLINE SYSTEM OPTION	
Option	**Description**
Port number for EFT Control	OFF: EFT Control function is not used. Port1-3: The communication port which the machine can perform a host command related EFT Control.
System Bonus Control:Port number	OFF: System Bonus Control function is not used. Port1-3: The communication port which the machine can perform a host command related System Bonus Control.
Progressive Control:Progressive Port	OFF: External progressive is not available. Port1-3: The communication port of which the machine communicates with Progressive controller.
Progressive Control:Mystery Jackpot Port	OFF: Mystery Jackpot is not avilable. Port1-3: The communication port of which the machine communicate with Mystery Jackpot controller.

Online System Option-Comm Port 1 Protocol

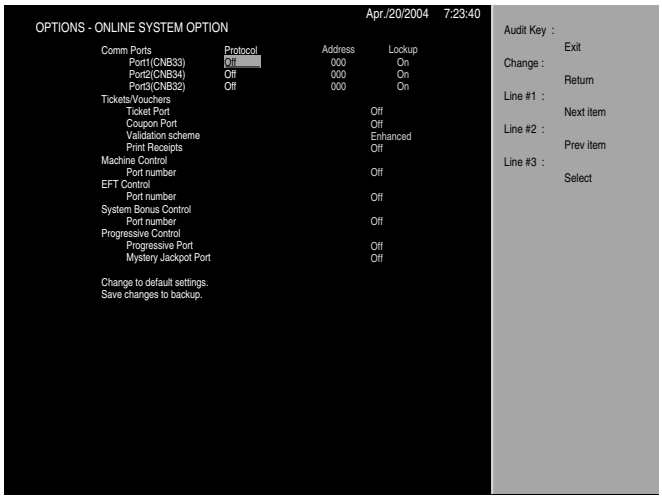

The audit key exits the K.M.S., the ***SELECT 1 LINE*** button moves to the next item, the ***SELECT 2 LINES*** button returns to the previous item and the ***SELECT 3 LINES*** enters the selection. The **COMM PORT 1 PROTOCOL** field is highlighted. Press the ***SELECT 3 LINES*** button to enter the selection. The following screen displays.

Setting Comm Port 1 Protocol

```
                                                    Apr./20/2004   7:23:40
OPTIONS - ONLINE SYSTEM OPTION                                              Audit Key :
                                                                                        Exit
        Comm Ports          Protocol        Address     Lockup              Change :
            Port1(CNB33)    Off             000         On                              Return
            Port2(CNB34)    Off             000         On                  Line #1 :
            Port3(CNB32)    Off             000         On                              Next status
        Tickets/Vouchers                                                    Line #2 :
            Ticket Port                                 Off                             Prev status
            Coupon Port                                 Off
            Validation scheme                           Enhanced
            Print Receipts                              Off
        Machine Control
            Port number                                 Off
        EFT Control
            Port number                                 Off
        System Bonus Control
            Port number                                 Off
        Progressive Control
            Progressive Port                            Off
            Mystery Jackpot Port                        Off

        Change to default settings.
        Save changes to backup.
```

When setting up the value of the option, the audit key exits the K.M.S., the ***CHANGE*** button returns to the item select screen, the ***SELECT 1 LINE*** button selects the next status and the ***SELECT 2 LINES*** button selects the previous status. To change the default comm port 1 protocol, press the ***SELECT 1 LINE*** button to change the status to SAS. Press the ***CHANGE*** button to return to the online system options screen. Press the ***SELECT 1 LINE*** button to tab to the **COMM PORT 1 ADDRESS** field. The following screen displays.

On Line System Option-Comm Port 1 Address

```
                                                    Apr./20/2004   7:23:40
OPTIONS - ONLINE SYSTEM OPTION                                              Audit Key :
                                                                                        Exit
        Comm Ports          Protocol        Address     Lockup              Change :
            Port1(CNB33)    SAS             000         On                              Return
            Port2(CNB34)    Off             000         On                  Line #1 :
            Port3(CNB32)    Off             000         On                              Next item
        Tickets/Vouchers                                                    Line #2 :
            Ticket Port                                 Off                             Prev item
            Coupon Port                                 Off
            Validation scheme                           Enhanced            Line #3 :
            Print Receipts                              Off                             Select
        Machine Control
            Port number                                 Off
        EFT Control
            Port number                                 Off
        System Bonus Control
            Port number                                 Off
        Progressive Control
            Progressive Port                            Off
            Mystery Jackpot Port                        Off

        Change to default settings.
        Save changes to backup.
```

The audit key exits the K.M.S., the ***SELECT 1 LINE*** button moves to the next item, the ***SELECT 2 LINES*** button returns to the previous item and the ***SELECT 3 LINES*** enters the selection. The **COMM PORT 1 ADDRESS** field is highlighted. Press the ***SELECT 3 LINES*** button to enter the selection. The following screen displays.

Setting Comm Port 1 Address

```
                                                    Apr./20/2004   7:23:40
OPTIONS - ONLINE SYSTEM OPTION                                              Audit Key :
                                                                                        Exit
        Comm Ports          Protocol        Address     Lockup              Change :
            Port1(CNB33)    SAS             000         On                              Return
            Port2(CNB34)    Off             000         On                  Line #1 :
            Port3(CNB32)    Off             000         On                              Increase (+)
        Tickets/Vouchers                                                    Line #2 :
            Ticket Port                                 Off                             Decrease (-)
            Coupon Port                                 Off
            Validation scheme                           Enhanced            Line #3 :
            Print Receipts                              Off                             Next figure
        Machine Control
            Port number                                 Off
        EFT Control
            Port number                                 Off
        System Bonus Control
            Port number                                 Off
        Progressive Control
            Progressive Port                            Off
            Mystery Jackpot Port                        Off

        Change to default settings.
        Save changes to backup.
```

When setting up the value of the option, the ***CHANGE*** button returns to the item select screen, the ***SELECT 1 LINE*** button increments the selection once for each time pressed, the ***SELECT 2 LINES*** button decrements the selection once for each time pressed and the ***SELECT 3 LINES*** button moves the cursor to the next figure. To set the comm port address to 002, press the ***SELECT 3 LINES*** button twice to go to the third figure, press the ***SELECT 1 LINE*** button twice to increment the figure to 2 then press the ***CHANGE*** button to return to the online system options screen. Press the ***SELECT 1 LINE*** button to tab to the **COMM PORT 1 LOCKUP** field. Press the ***SELECT 3 LINES*** button to enter the selection. The following screen displays.

On Line System Option-Comm Port 1 Lockup

```
                                                    Apr./20/2004   7:23:40
OPTIONS - ONLINE SYSTEM OPTION                                              Audit Key :
                                                                                        Exit
        Comm Ports          Protocol        Address     Lockup              Change :
            Port1(CNB33)    SAS             002         On                              Return
            Port2(CNB34)    Off             000         On                  Line #1 :
            Port3(CNB32)    Off             000         On                              Next item
        Tickets/Vouchers                                                    Line #2 :
            Ticket Port                                 Off                             Prev item
            Coupon Port                                 Off
            Validation scheme                           Enhanced            Line #3 :
            Print Receipts                              Off                             Select
        Machine Control
            Port number                                 Off
        EFT Control
            Port number                                 Off
        System Bonus Control
            Port number                                 Off
        Progressive Control
            Progressive Port                            Off
            Mystery Jackpot Port                        Off

        Change to default settings.
        Save changes to backup.
```

The audit key exits the K.M.S., the ***SELECT 1 LINE*** button moves to the next item, the ***SELECT 2 LINES*** button returns to the previous item and the ***SELECT 3 LINES*** enters the selection. The **COMM PORT 1 LOCKUP** field is highlighted. Press the ***SELECT 3 LINES*** button to enter the selection. The following screen displays.

Setting Comm Port 1 Lockup

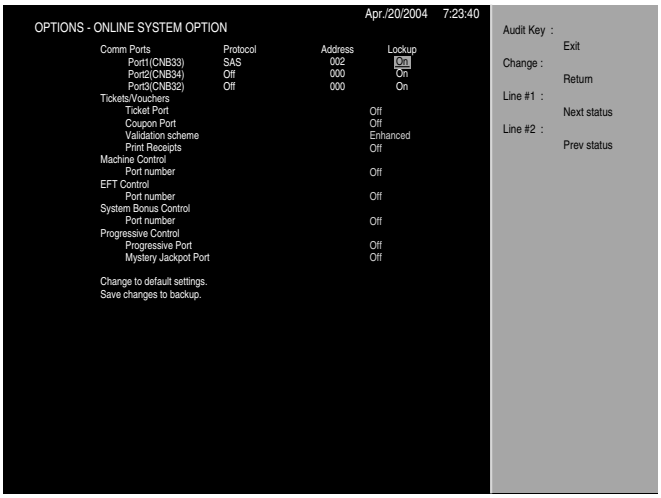

When setting up the value of the option, the ***CHANGE*** button returns to the item select screen, the ***SELECT 1 LINE*** button selects the next status and the ***SELECT 2 LINES*** button selects the previous status. To accept the comm port lockup option to ON, press the ***CHANGE*** button to return to the online system options screen. Press the ***SELECT 1 LINE*** button to tab to the **COMM PORT 2 PROTOCOL** field. Press the ***SELECT 3 LINES*** button to enter the selection. The following screen displays.

Setting Comm Port 2 Protocol

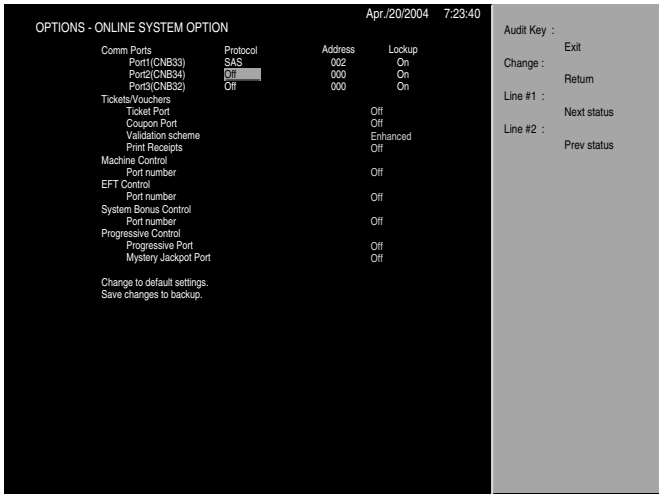

When setting up the value of the option, the audit key exits the K.M.S., the ***CHANGE*** button returns to the item select screen, the ***SELECT 1 LINE*** button selects the next status and the ***SELECT 2 LINES*** button selects the previous status. To change the default comm port 2 protocol, press the ***SELECT 1 LINE*** button to change the status to SAS. Press the ***CHANGE*** button to return to the online system options screen. Press the ***SELECT 1 LINE*** button to tab to the **COMM PORT 2 ADDRESS** field. The following screen displays.

Online System Option-Comm Port 2 Protocol

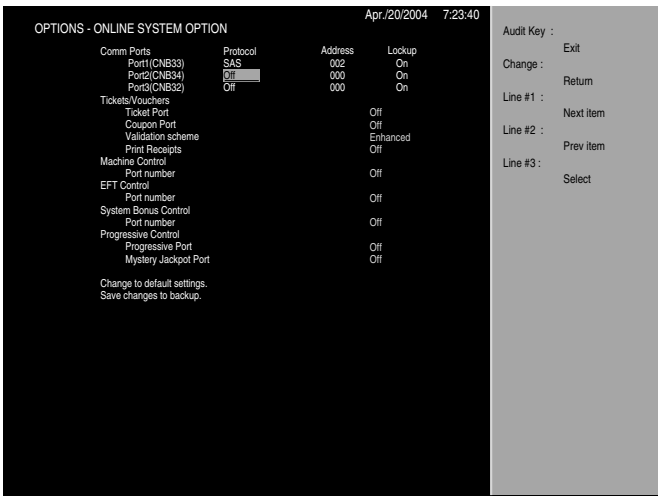

The audit key exits the K.M.S., the ***SELECT 1 LINE*** button moves to the next item, the ***SELECT 2 LINES*** button returns to the previous item and the ***SELECT 3 LINES*** enters the selection. The **COMM PORT 2 PROTOCOL** field is highlighted. Press the ***SELECT 3 LINES*** button to enter the selection. The following screen displays.

On Line System Option-Comm Port 2 Address

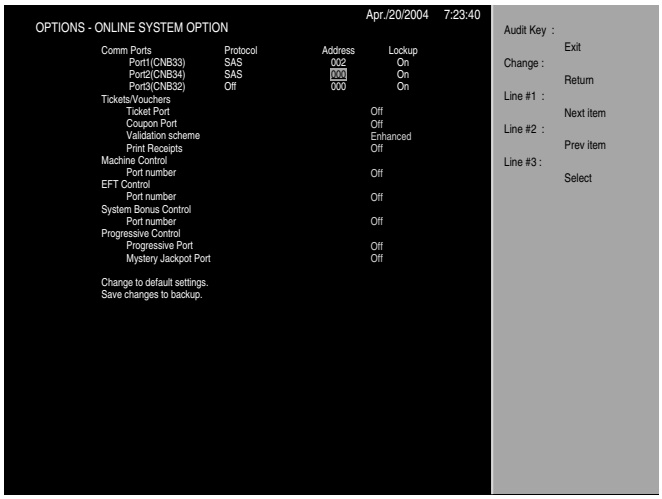

The audit key exits the K.M.S., the ***SELECT 1 LINE*** button moves to the next item, the ***SELECT 2 LINES*** button returns to the previous item and the ***SELECT 3 LINES*** enters the selection. The **COMM PORT 2 ADDRESS** field is highlighted. Press the ***SELECT 3 LINES*** button to enter the selection. The following screen displays.

Setting Comm Port 2 Address

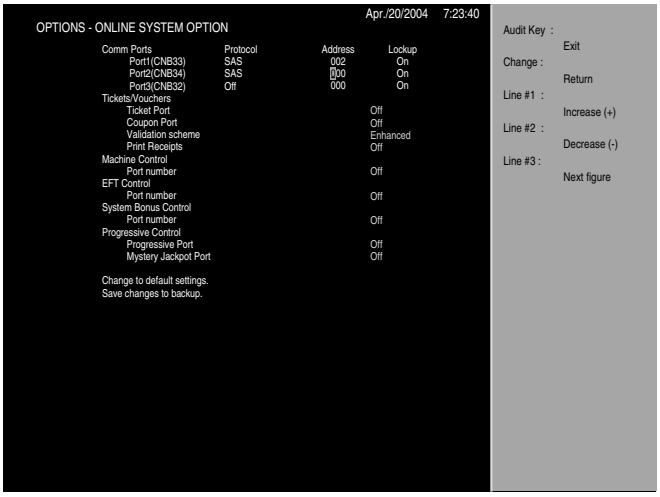

When setting up the value of the option, the ***CHANGE*** button returns to the item select screen, the ***SELECT 1 LINE*** button increments the selection once for each time pressed, the ***SELECT 2 LINES*** button decrements the selection once for each time pressed and the ***SELECT 3 LINES*** button moves the cursor to the next figure. To set the comm port address to 002, press the ***SELECT 3 LINES*** button twice to go to the third figure, press the ***SELECT 1 LINE*** button twice to increment the figure to 2 then press the ***CHANGE*** button to return to the online system options screen. Press the ***SELECT 1 LINE*** button to tab to the **COMM PORT 2 LOCKUP** field. Press the ***SELECT 3 LINES*** button to enter the selection. The following screen displays.

On Line System Option-Comm Port 2 Lockup

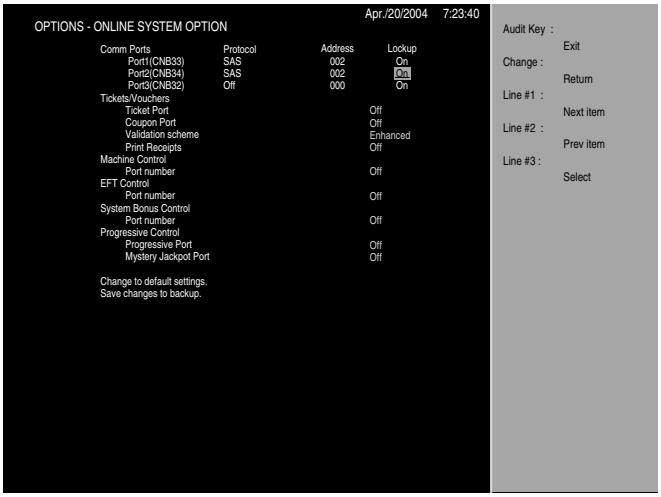

The audit key exits the K.M.S., the ***SELECT 1 LINE*** button moves to the next item, the ***SELECT 2 LINES*** button returns to the previous item and the ***SELECT 3 LINES*** enters the selection. The **COMM PORT 2 LOCKUP** field is highlighted. Press the ***SELECT 3 LINES*** button to enter the selection. The following screen displays.

Setting Comm Port 2 Lockup

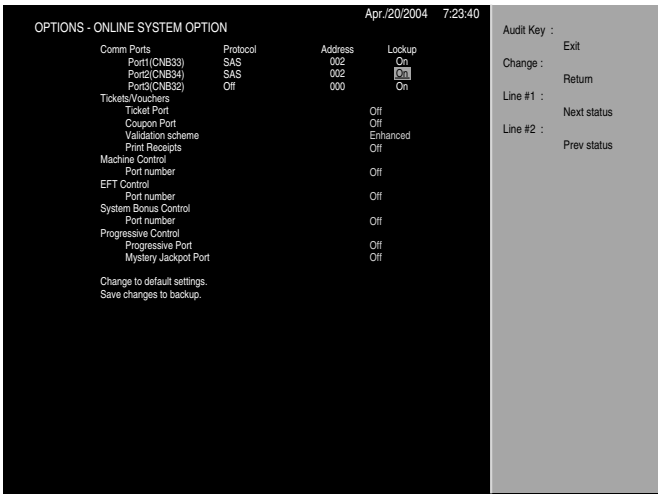

When setting up the value of the option, the ***CHANGE*** button returns to the item select screen, the ***SELECT 1 LINE*** button selects the next status and the ***SELECT 2 LINES*** button selects the previous status. To accept the comm port lockup option to ON, press the ***CHANGE*** button to return to the online system options screen. Press the ***SELECT 1 LINE*** button to tab to the **COMM PORT 3 PROTOCOL** field. Press the ***SELECT 3 LINES*** button to enter the selection. The following screen displays.

Online System Option-Comm Port 3 Protocol

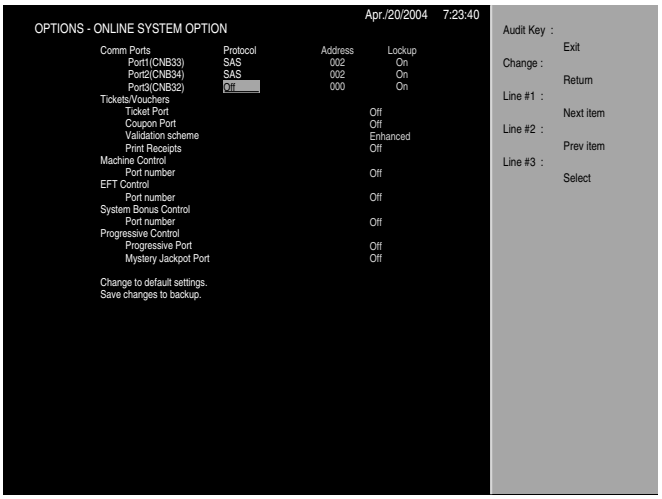

The audit key exits the K.M.S., the ***SELECT 1 LINE*** button moves to the next item, the ***SELECT 2 LINES*** button returns to the previous item and the ***SELECT 3 LINES*** enters the selection. The **COMM PORT 3 PROTOCOL** field is highlighted. Press the ***SELECT 3 LINES*** button to enter the selection. The following screen displays.

Setting Comm Port 3 Protocol

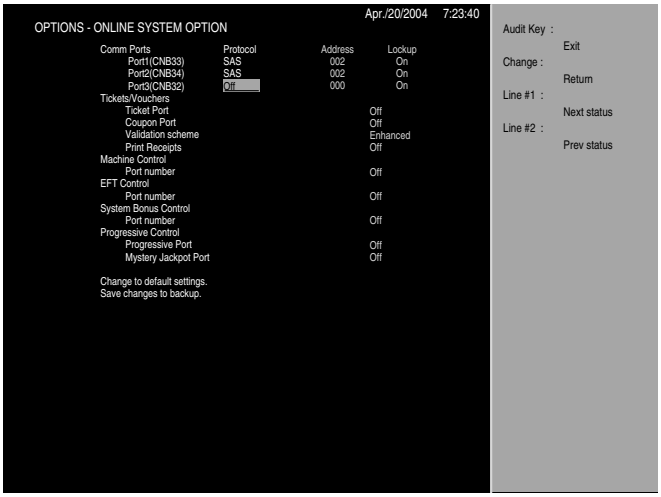

When setting up the value of the option, the audit key exits the K.M.S., the ***CHANGE*** button returns to the item select screen, the ***SELECT 1 LINE*** button selects the next status and the ***SELECT 2 LINES*** button selects the previous status. To change the default comm port 3 protocol, press the ***SELECT 1 LINE*** button to change the status to SAS. Press the ***CHANGE*** button to return to the online system options screen. Press the ***SELECT 1 LINE*** button to tab to the **COMM PORT 3 ADDRESS** field. The following screen displays.

On Line System Option-Comm Port 3 Address

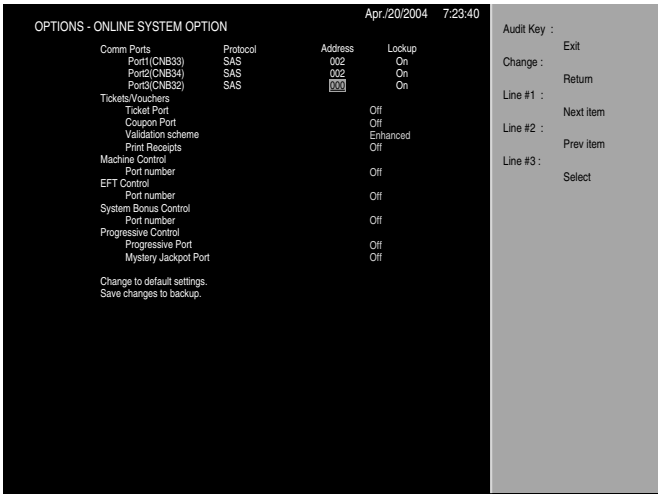

The audit key exits the K.M.S., the ***SELECT 1 LINE*** button moves to the next item, the ***SELECT 2 LINES*** button returns to the previous item and the ***SELECT 3 LINES*** enters the selection. The **COMM PORT 3 ADDRESS** field is highlighted. Press the ***SELECT 3 LINES*** button to enter the selection. The following screen displays.

Setting Comm Port 3 Address

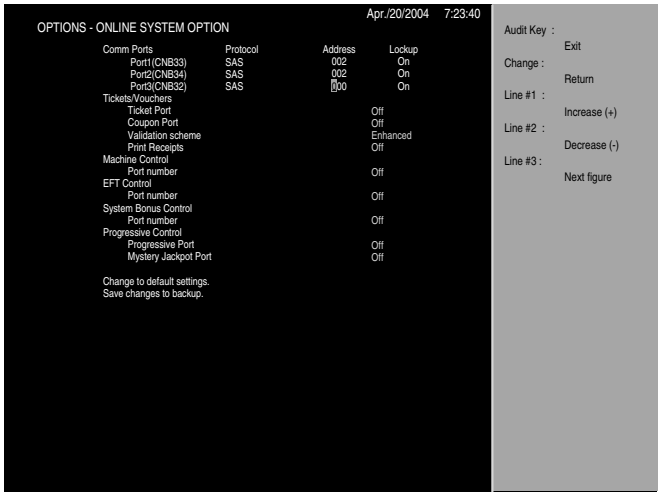

When setting up the value of the option, the ***CHANGE*** button returns to the item select screen, the ***SELECT 1 LINE*** button increments the selection once for each time pressed, the ***SELECT 2 LINES*** button decrements the selection once for each time pressed and the ***SELECT 3 LINES*** button moves the cursor to the next figure. To set the comm port address to 002, press the ***SELECT 3 LINES*** button twice to go to the third figure, press the ***SELECT 1 LINE*** button twice to increment the figure to 2 then press the ***CHANGE*** button to return to the online system options screen. Press the ***SELECT 1 LINE*** button to tab to the **COMM PORT 3 LOCKUP** field. Press the ***SELECT 3 LINES*** button to enter the selection. The following screen displays.

On Line System Option-Comm Port 2 Lockup

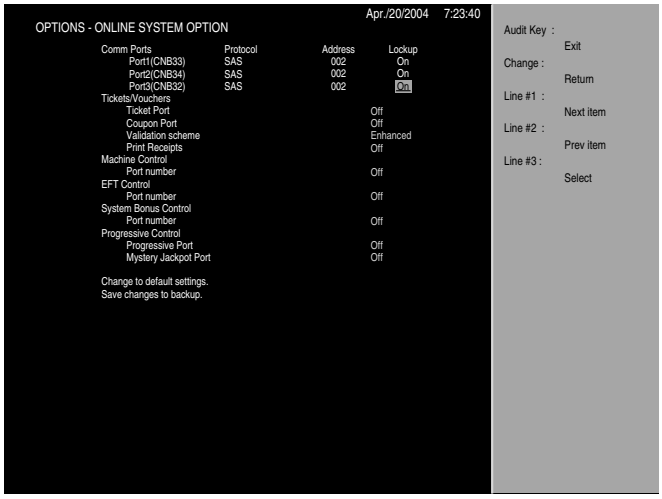

The audit key exits the K.M.S., the ***SELECT 1 LINE*** button moves to the next item, the ***SELECT 2 LINES*** button returns to the previous item and the ***SELECT 3 LINES*** enters the selection. The **COMM PORT 3 LOCKUP** field is highlighted. Press the ***SELECT 3 LINES*** button to enter the selection. The following screen displays.

Setting Comm Port 3 Lockup

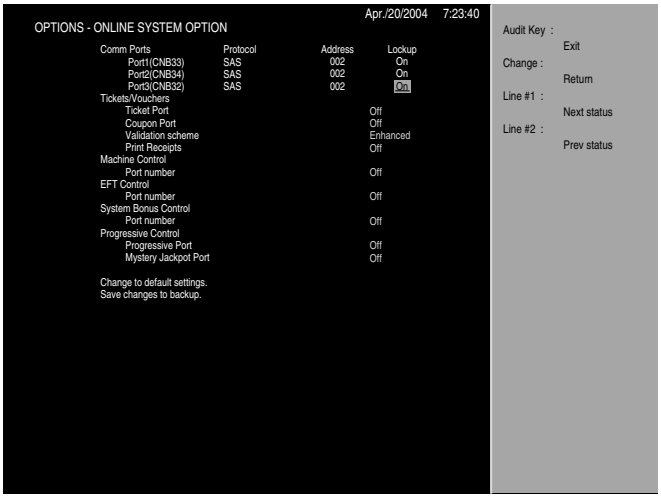

When setting up the value of the option, the ***CHANGE*** button returns to the item select screen, the ***SELECT 1 LINE*** button selects the next status and the ***SELECT 2 LINES*** button selects the previous status. To accept the comm port lockup option to ON, press the ***CHANGE*** button to return to the online system options screen. Press the ***SELECT 1 LINE*** button to tab to the **TICKET PORT** field. Press the ***SELECT 3 LINES*** button to enter the selection. The following screen displays.

Setting Tickets/Vouchers-Ticket Port

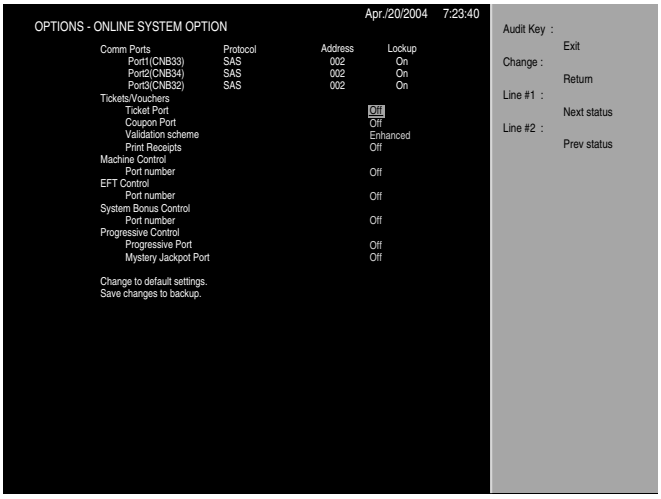

When setting up the value of the option, the ***CHANGE*** button returns to the item select screen, the ***SELECT 1 LINE*** button selects the next status and the ***SELECT 2 LINES*** button selects the previous status. To accept the ticket port value of "OFF", press the ***CHANGE*** button to return to the online system options screen. Press the ***SELECT 1 LINE*** button to tab to the **COUPON PORT** field. Press the ***SELECT 3 LINES*** button to enter the selection. The following screen displays.

Setting Tickets/Vouchers-Coupon Port

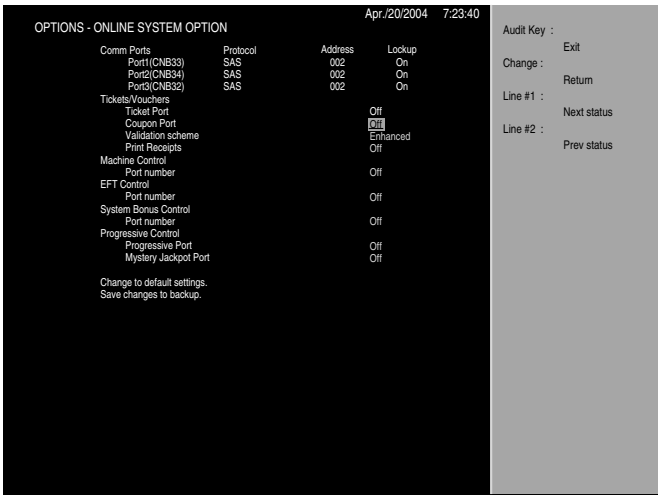

When setting up the value of the option, the ***CHANGE*** button returns to the item select screen, the ***SELECT 1 LINE*** button selects the next status and the ***SELECT 2 LINES*** button selects the previous status. To accept the coupon port value of "OFF", press the ***CHANGE*** button to return to the online system options screen. Press the ***SELECT 1 LINE*** button to tab to the **VALIDATION SCHEME** field. Press the ***SELECT 3 LINES*** button to enter the selection. The following screen displays.

Setting Tickets/Vouchers-Validation Scheme

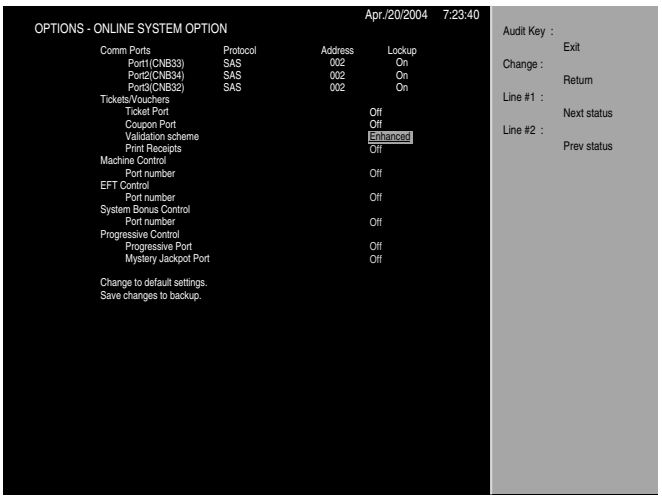

When setting up the value of the option, the ***CHANGE*** button returns to the item select screen, the ***SELECT 1 LINE*** button selects the next status and the ***SELECT 2 LINES*** button selects the previous status. To accept the validation scheme value of "ENHANCED", press the ***CHANGE*** button to return to the online system options screen. Press the ***SELECT 1 LINE*** button to tab to the **PRINT RECEIPTS** field. Press the ***SELECT 3 LINES*** button to enter the selection. The following screen displays.

Setting Tickets/Vouchers-Print Receipts

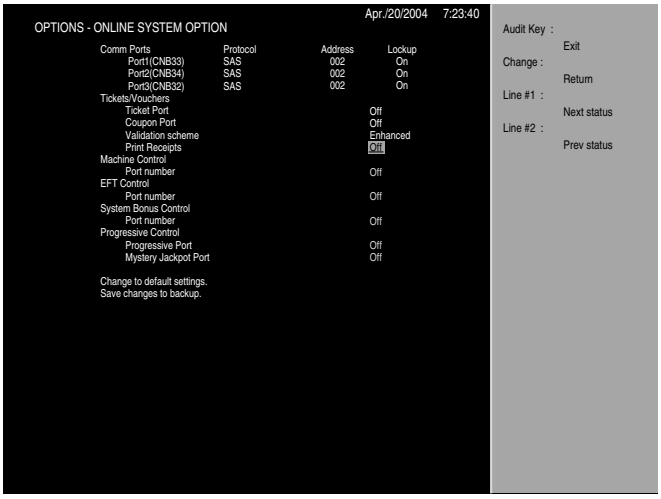

When setting up the value of the option, the ***CHANGE*** button returns to the item select screen, the ***SELECT 1 LINE*** button selects the next status and the ***SELECT 2 LINES*** button selects the previous status. To accept the print receipts value of "OFF", press the ***CHANGE*** button to return to the online system options screen. Press the ***SELECT 1 LINE*** button to tab to the **MACHINE CONTROL PORT NUMBER** field. Press the ***SELECT 3 LINES*** button to enter the selection. The following screen displays.

Setting EFT Control-Port Number

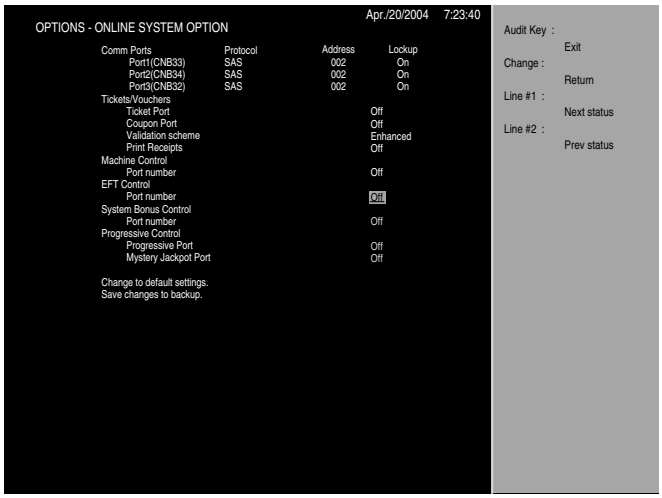

When setting up the value of the option, the ***CHANGE*** button returns to the item select screen, the ***SELECT 1 LINE*** button selects the next status and the ***SELECT 2 LINES*** button selects the previous status. To accept the EFT control port number value of "OFF", press the ***CHANGE*** button to return to the online system options screen. Press the ***SELECT 1 LINE*** button to tab to the **SYSTEM BONUS CONTROL PORT NUMBER** field. Press the ***SELECT 3 LINES*** button to enter the selection. The following screen displays.

Setting Machine Control-Port Number

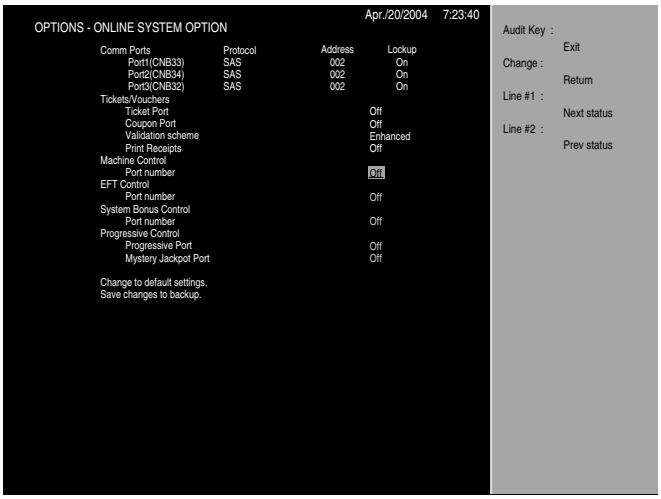

When setting up the value of the option, the ***CHANGE*** button returns to the item select screen, the ***SELECT 1 LINE*** button selects the next status and the ***SELECT 2 LINES*** button selects the previous status. To accept the machine control port number value of "OFF", press the ***CHANGE*** button to return to the online system options screen. Press the ***SELECT 1 LINE*** button to tab to the **EFT CONTROL PORT NUMBER** field. Press the ***SELECT 3 LINES*** button to enter the selection. The following screen displays.

Setting System Bonus Control-Port Number

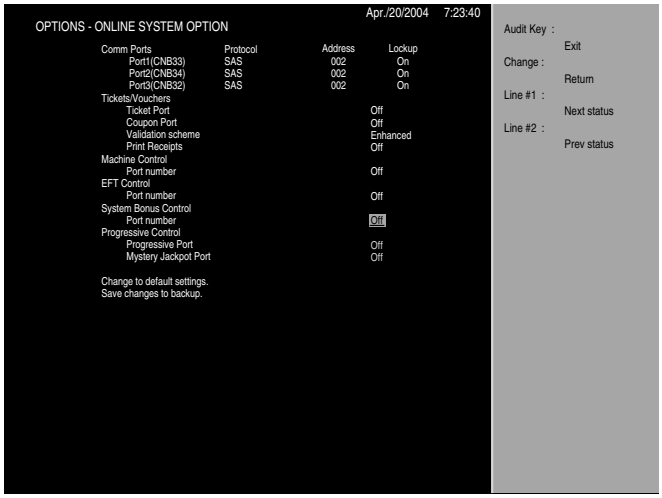

When setting up the value of the option, the ***CHANGE*** button returns to the item select screen, the ***SELECT 1 LINE*** button selects the next status and the ***SELECT 2 LINES*** button selects the previous status. To accept the system bonus control port number value of "OFF", press the ***CHANGE*** button to return to the online system options screen. Press the ***SELECT 1 LINE*** button to tab to the **PROGRESSIVE CONTROL PROGRESSIVE PORT** field. Press the ***SELECT 3 LINES*** button to enter the selection. The following screen displays.

Setting Progressive Control-Progressive Port

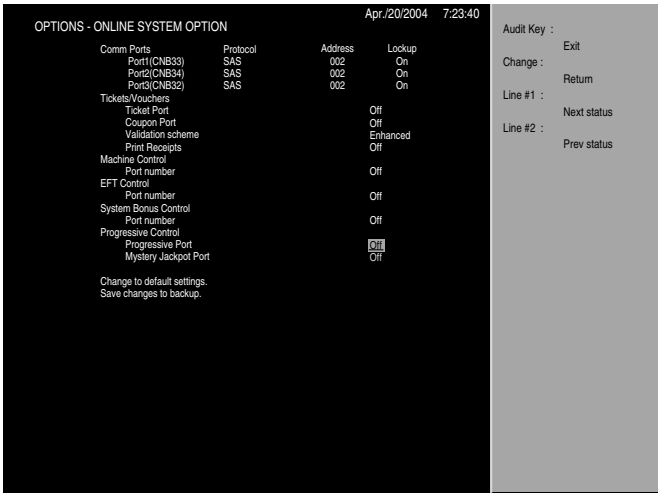

When setting up the value of the option, the ***CHANGE*** button returns to the item select screen, the ***SELECT 1 LINE*** button selects the next status and the ***SELECT 2 LINES*** button selects the previous status. To accept the system bonus control port number value of "OFF", press the ***CHANGE*** button to return to the online system options screen. Press the ***SELECT 1 LINE*** button to tab to the **MYSTERY JACKPOT PORT** field. Press the ***SELECT 3 LINES*** button to enter the selection. The following screen displays.

Setting Progressive Control-Mystery Jackpot Port

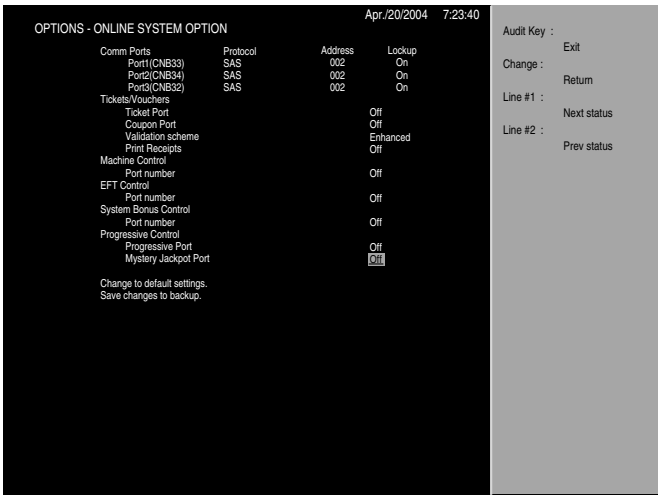

When setting up the value of the option, the ***CHANGE*** button returns to the item select screen, the ***SELECT 1 LINE*** button selects the next status and the ***SELECT 2 LINES*** button selects the previous status. To accept the system bonus control port number value of "OFF", press the ***CHANGE*** button to return to the online system options screen. Press the CHANGE button again to return to the main options screen. Press the ***SELECT 1 LINE*** button to tab to the **PROGRESSIVE OPTION** field. The following screen displays.

Progressive Option

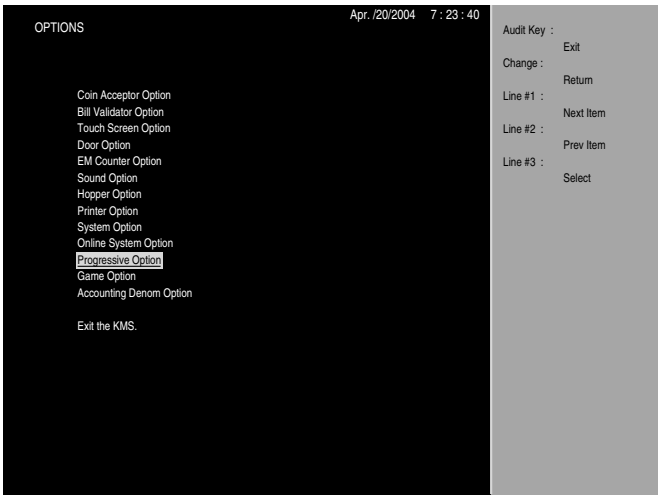

The **PROGRESSIVE OPTION** field is highlighted. Press the ***SELECT 3 LINES*** button to enter the selection. The following screen displays.

PROGRESSIVE OPTION	
Option	**Description**
Top Award Type	Credit: Top award is paid as credits. Progressive: Top award is paid as a progressive amount. Prize: Top award is paid as a prize.
Group ID	Progressive group number.
Max. Progressive Levels	0-9. Determines how many levels of progressive jackpot will be available for the player to win.
Mystery Jackpot Type	Credit: Mystery jackpot is paid as credits. Prize: Mystery jackpot is paid as a prize.
Mystery Jackpot Threshold	The mystery jackpot threshold that the machine locks up for handpay when the mystery jackpot is hit. If the machine receives jackpot amount as mystery jackpot hit and the amount exceeds this configuration the amount will be paid by attendant.

Progressive Option-Top Award Type

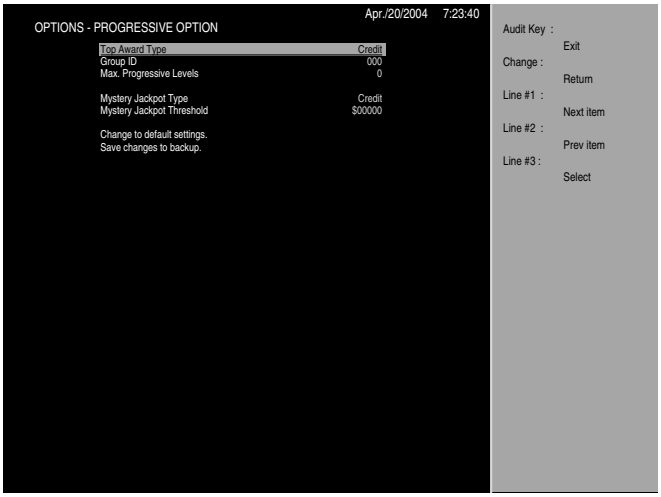

The audit key exits the K.M.S., the ***SELECT 1 LINE*** button moves to the next item, the ***SELECT 2 LINES*** button returns to the previous item and the ***SELECT 3 LINES*** enters the selection. The **TOP AWARD TYPE** field is highlighted. Press the ***SELECT 3 LINES*** button to enter the selection. The following screen displays.

Setting Top Award Type

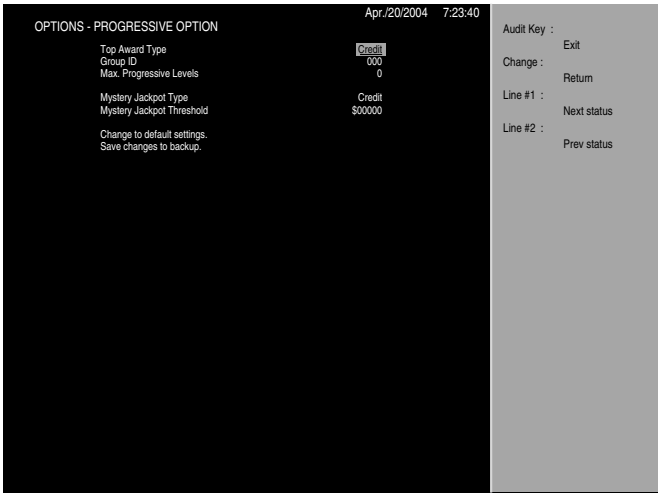

When setting up the value of the option, the ***CHANGE*** button returns to the item select screen, the ***SELECT 1 LINE*** button selects the next status and the ***SELECT 2 LINES*** button selects the previous status. To accept the top award type value of "CREDIT", press the ***CHANGE*** button to return to the online system options screen. Press the ***SELECT 1 LINE*** button to tab to the **GROUP ID** field. Press the ***SELECT 3 LINES*** button to enter the selection. The following screen displays.

Setting Group ID

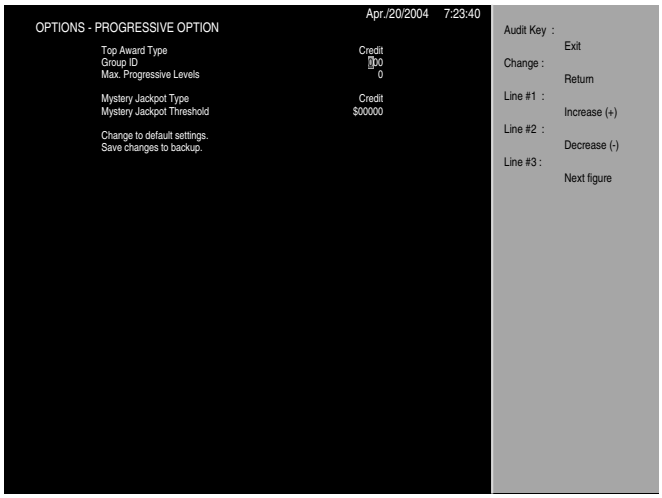

When setting up the value of the option, the ***CHANGE*** button returns to the item select screen, the ***SELECT 1 LINE*** button increments the selection once for each time pressed, the ***SELECT 2 LINES*** button decrements the selection once for each time pressed and the ***SELECT 3 LINES*** button moves the cursor to the next figure. To set the comm port address to 002, press the ***SELECT 3 LINES*** button twice to go to the third figure, press the ***SELECT 1 LINE*** button twice to increment the figure to 2 then press the ***CHANGE*** button to return to the online progressive options screen. Press the ***SELECT 1 LINE*** button to tab to the **MAX. PROGRESSIVE LEVELS** field. Press the ***SELECT 3 LINES*** button to enter the selection. The following screen displays.

Setting Max Levels

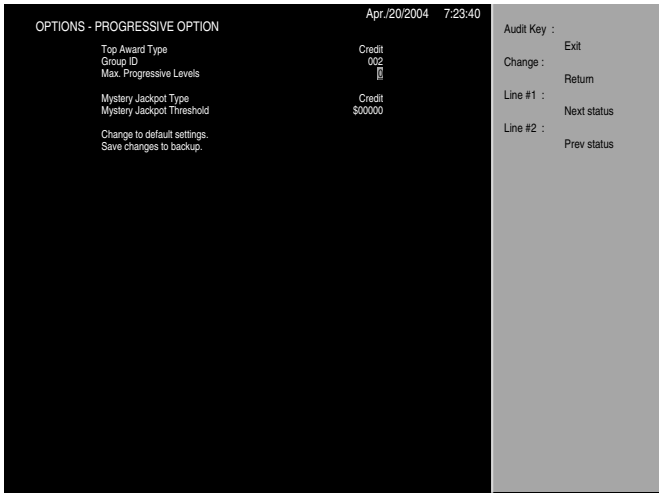

When setting up the value of the option, the ***CHANGE*** button returns to the item select screen, the ***SELECT 1 LINE*** button selects the next status and the ***SELECT 2 LINES*** button selects the previous status. To change the max progressive levels to 3, press the ***SELECT 1 LINE*** button three times then press the ***CHANGE*** button to return to the progressive options screen. Press the ***SELECT 1 LINE*** button to tab to the **MYSTERY JACKPOT TYPE** field. Press the ***SELECT 3 LINES*** button to enter the selection. The following screen displays.

Setting Mystery Jackpot Type

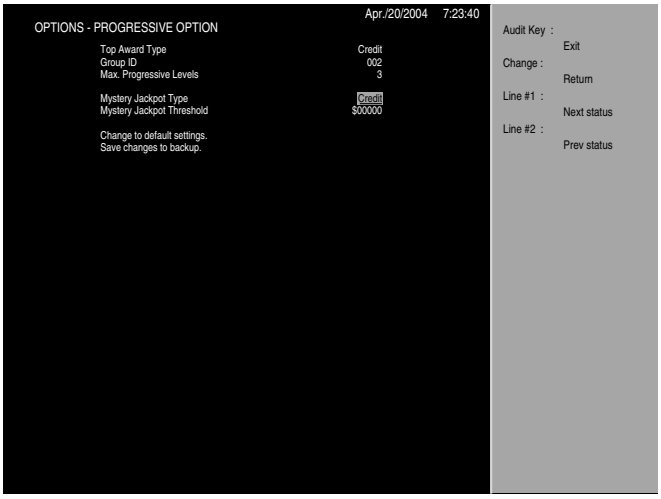

When setting up the value of the option, the ***CHANGE*** button returns to the item select screen, the ***SELECT 1 LINE*** button selects the next status and the ***SELECT 2 LINES*** button selects the previous status. To accept the default value of "CREDIT", press the ***CHANGE*** button to return to the progressive options screen. Press the ***CHANGE*** button again to return to the main options screen. Press the ***SELECT 1 LINE*** button to tab to the **MYSTERY JACKPOT THRESHOLD** field. The following screen displays.

Setting Mystery Jackpot Threshold

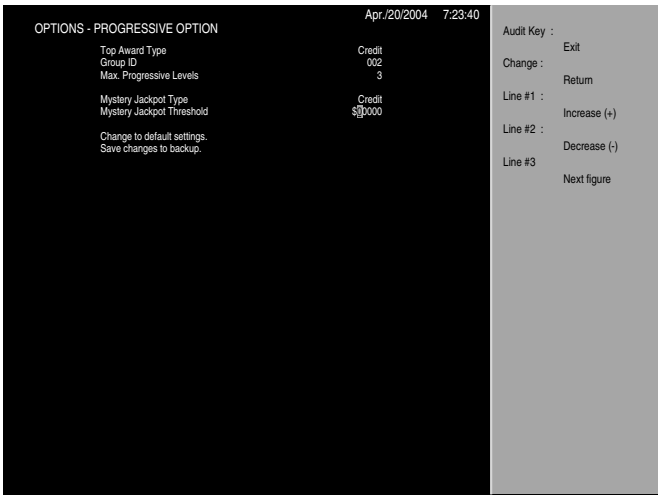

When setting up the value of the option, the ***CHANGE*** button returns to the item select screen, the ***SELECT 1 LINE*** button increments the selection once for each time pressed, the ***SELECT 2 LINES*** button decrements the selection once for each time pressed and the ***SELECT 3 LINES*** button moves the cursor to the next figure. To set the comm port address to 002, press the ***SELECT 3 LINES*** button twice to go to the third figure, press the ***SELECT 1 LINE*** button twice to increment the figure to 2 then press the ***CHANGE*** button to return to the online progressive options screen. Press the ***SELECT 1 LINE*** button to tab to the **MAX. PROGRESSIVE LEVELS** field. Press the ***SELECT 3 LINES*** button to enter the selection. The following screen displays.

Game Option

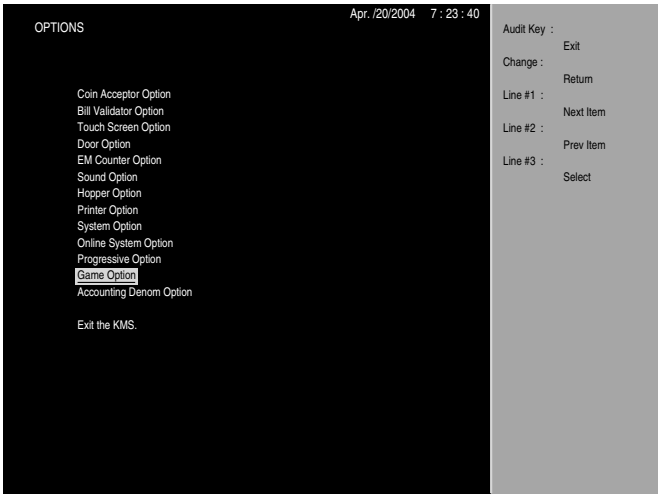

The **GAME OPTION** field is highlighted. Press the ***SELECT 3 LINES*** button to enter the selection. The following screen displays.

GAME OPTION	
Option	**Description**
Pay Table for $0.01- $1.00.	Available payback percentage for each denomination.
Play Line Max.	Total line of the game.
Bet Max.	Total maximum wager.
Attract Mode.	ON: Show attract demo when the credits are zero. OFF: No attract demo.
Attract mode sound level.	-15 (Silent) to 15 (Loud). Attract Sound level. (This level is based on the original sound).
Attract mode interval.	60-255 Seconds Interval for playing attract mode. Note: When an invalid range is set, these numerals turn red and the page cannot be saved until a valid setting is applied.
Cash Display	Cash Only: Credits displayed in dollar amounts. Credit Only: Credits diplayed as credits. Selectable: Player can determine if credits are displayed as cash or credit.

Pay Table For $0.01 Game

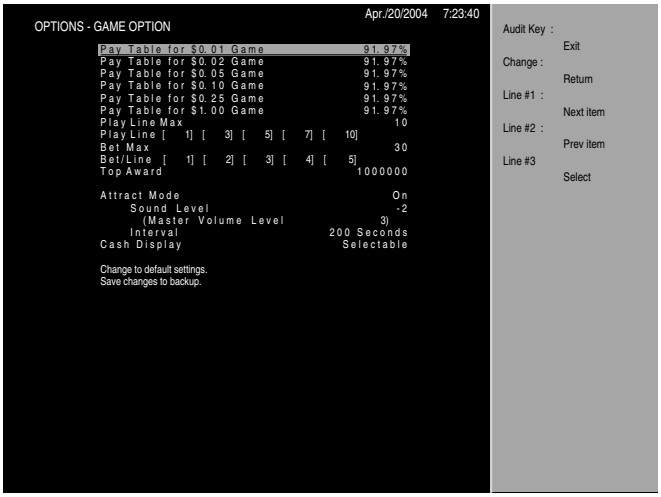

The audit key exits the K.M.S., the ***SELECT 1 LINE*** button moves to the next item, the ***SELECT 2 LINES*** button returns to the previous item and the ***SELECT 3 LINES*** enters the selection. The **PAY TABLE FOR $0.01 GAME** field is highlighted. Press the ***SELECT 3 LINES*** button to enter the selection. The following screen displays.

Setting Pay Table For $0.01 Game

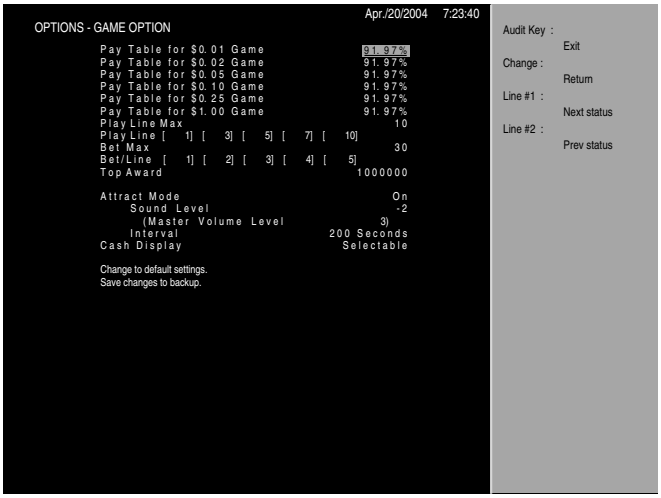

When setting up the value of the option, the ***CHANGE*** button returns to the item select screen, the ***SELECT 1 LINE*** button selects the next status and the ***SELECT 2 LINES*** button selects the previous status. To accept the default percentage, press the ***CHANGE*** button to return to the game options screen. Press the ***SELECT 1 LINE*** button to tab to the **PAY TABLE FOR $0.02 GAME** field. Press the ***SELECT 3 LINES*** button to enter the selection. The following screen displays.

Setting Pay Table For $0.02 Game

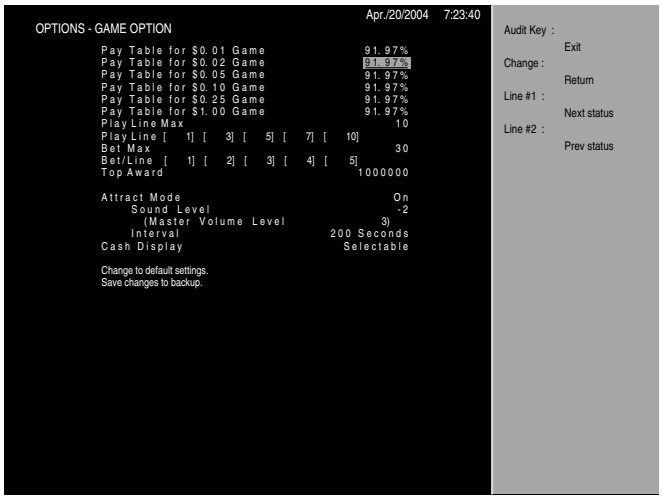

When setting up the value of the option, the ***CHANGE*** button returns to the item select screen, the ***SELECT 1 LINE*** button selects the next status and the ***SELECT 2 LINES*** button selects the previous status. To accept the default percentage, press the ***CHANGE*** button to return to the game options screen. Press the ***SELECT 1 LINE*** button to tab to the **PAY TABLE FOR $0.05 GAME** field. Press the ***SELECT 3 LINES*** button to enter the selection. The following screen displays.

Setting Pay Table For $0.05 Game

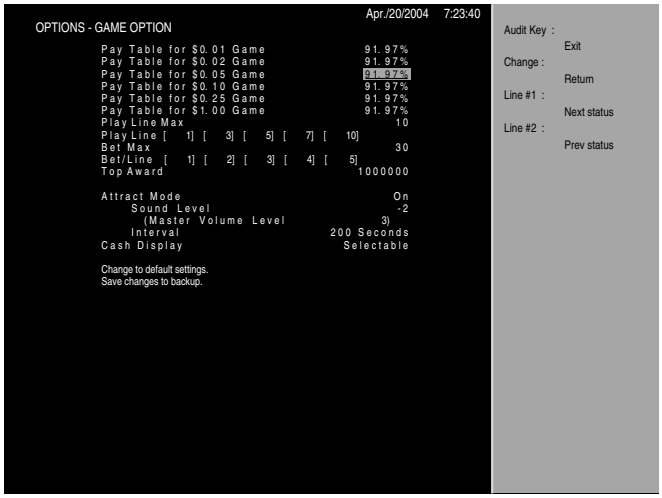

When setting up the value of the option, the ***CHANGE*** button returns to the item select screen, the ***SELECT 1 LINE*** button selects the next status and the ***SELECT 2 LINES*** button selects the previous status. To accept the default percentage, press the ***CHANGE*** button to return to the game options screen. Press the ***SELECT 1 LINE*** button to tab to the **PAY TABLE FOR $0.05 GAME** field. Press the ***SELECT 3 LINES*** button to enter the selection. The following screen displays.

Setting Pay Table For $0.10 Game

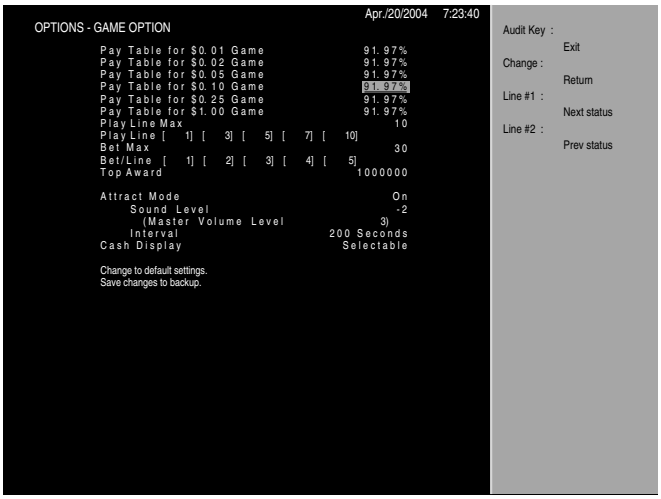

When setting up the value of the option, the ***CHANGE*** button returns to the item select screen, the ***SELECT 1 LINE*** button selects the next status and the ***SELECT 2 LINES*** button selects the previous status. To accept the default percentage, press the ***CHANGE*** button to return to the game options screen. Press the ***SELECT 1 LINE*** button to tab to the **PAY TABLE FOR $0.25 GAME** field. Press the ***SELECT 3 LINES*** button to enter the selection. The following screen displays.

Setting Pay Table For $0.25 Game

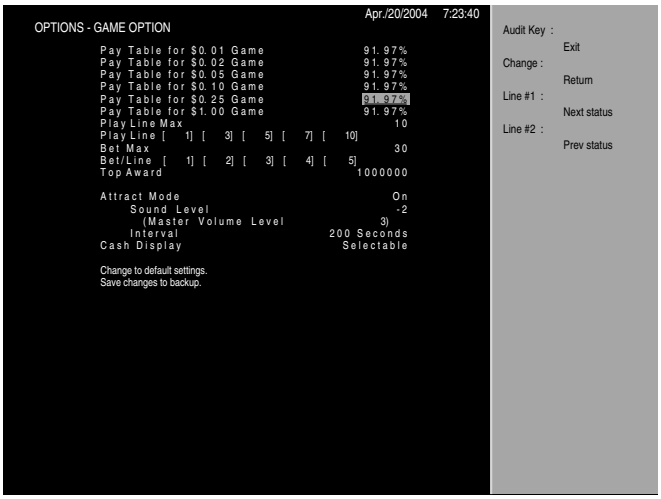

When setting up the value of the option, the ***CHANGE*** button returns to the item select screen, the ***SELECT 1 LINE*** button selects the next status and the ***SELECT 2 LINES*** button selects the previous status. To accept the default percentage, press the ***CHANGE*** button to return to the game options screen. Press the ***SELECT 1 LINE*** button to tab to the **PAY TABLE FOR $1.00 GAME** field. Press the ***SELECT 3 LINES*** button to enter the selection. The following screen displays.

Setting Pay Table For $1.00 Game

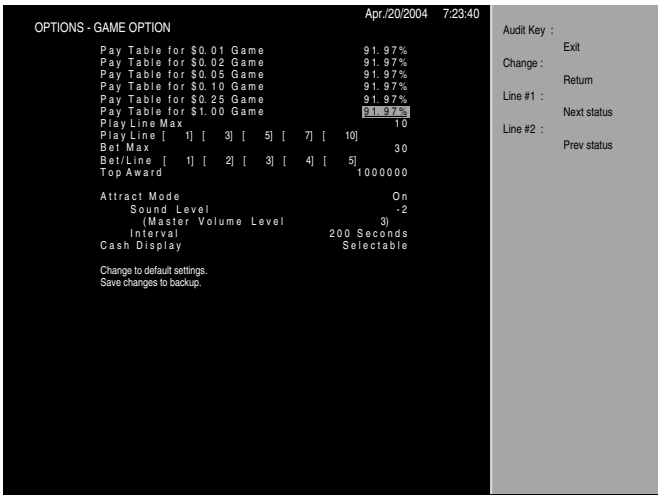

When setting up the value of the option, the ***CHANGE*** button returns to the item select screen, the ***SELECT 1 LINE*** button selects the next status and the ***SELECT 2 LINES*** button selects the previous status. To accept the default percentage, press the ***CHANGE*** button to return to the game options screen. Press the ***SELECT 1 LINE*** button to tab to the **PLAY LINE MAX** field. Press the ***SELECT 3 LINES*** button to enter the selection. The following screen displays.

Setting Play Line Max

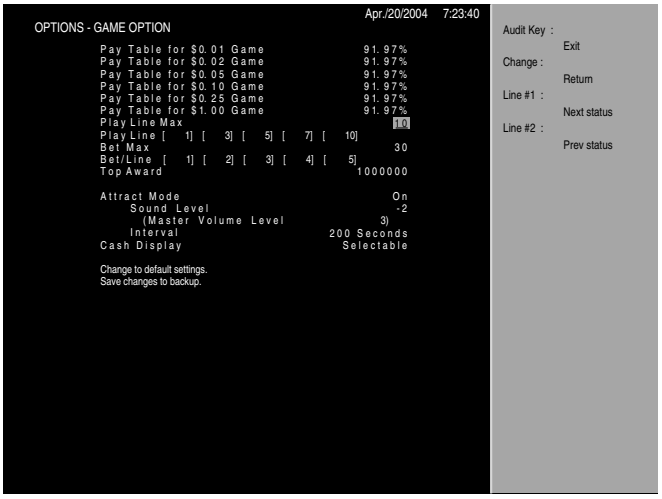

When setting up the value of the option, the ***CHANGE*** button returns to the item select screen, the ***SELECT 1 LINE*** button selects the next status and the ***SELECT 2 LINES*** button selects the previous status. To accept the default play line max, press the ***CHANGE*** button to return to the game options screen. Press the ***SELECT 1 LINE*** button to tab to the **BET MAX** field. Press the ***SELECT 3 LINES*** button to enter the selection. The following screen displays.

Setting Bet Max

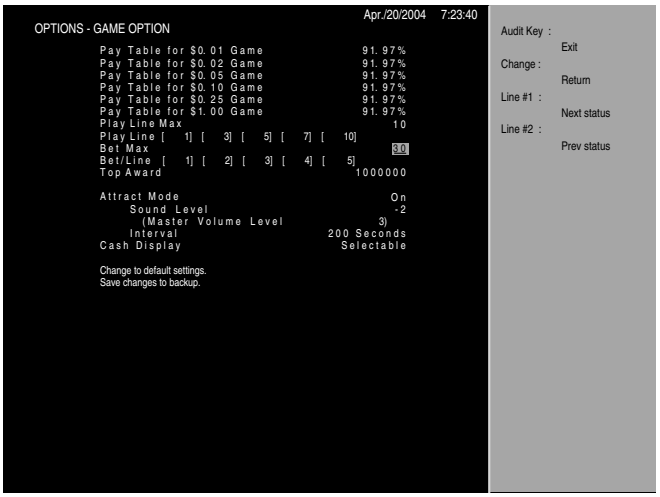

When setting up the value of the option, the ***CHANGE*** button returns to the item select screen, the ***SELECT 1 LINE*** button selects the next status and the ***SELECT 2 LINES*** button selects the previous status. To accept the default play line max, press the ***CHANGE*** button to return to the game options screen. Press the ***SELECT 1 LINE*** button to tab to the **ATTRACT MODE** field. Press the ***SELECT 3 LINES*** button to enter the selection. The following screen displays.

Setting Attract Mode On/Off

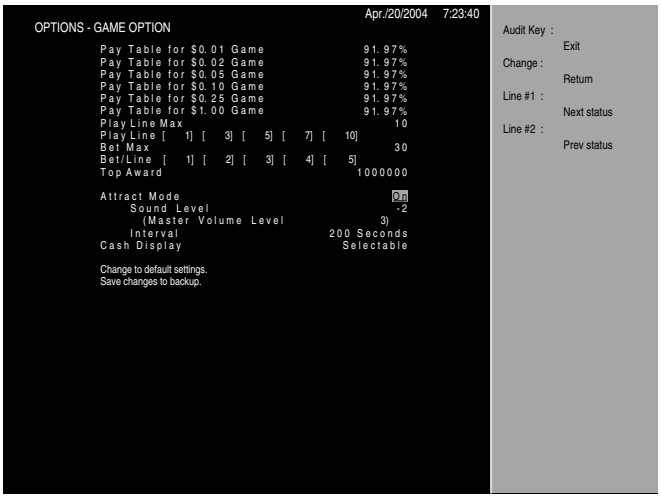

When setting up the value of the option, the ***CHANGE*** button returns to the item select screen, the ***SELECT 1 LINE*** button selects the next status and the ***SELECT 2 LINES*** button selects the previous status. To accept the default attract mode value "ON", press the ***CHANGE*** button to return to the game options screen. Press the ***SELECT 1 LINE*** button to tab to the **SOUND LEVEL** field. Press the ***SELECT 3 LINES*** button to enter the selection. The following screen displays.

Setting Sound Level

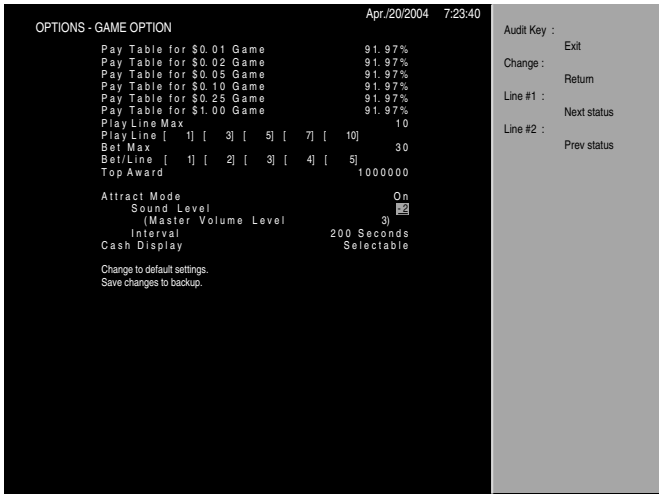

When setting up the value of the option, the ***CHANGE*** button returns to the item select screen, the ***SELECT 1 LINE*** button selects the next status and the ***SELECT 2 LINES*** button selects the previous status. To accept the default sound level value "-2", press the ***CHANGE*** button to return to the game options screen. Press the ***SELECT 1 LINE*** button to tab to the **INTERVAL** field. Press the ***SELECT 3 LINES*** button to enter the selection. The following screen displays.

Setting Interval

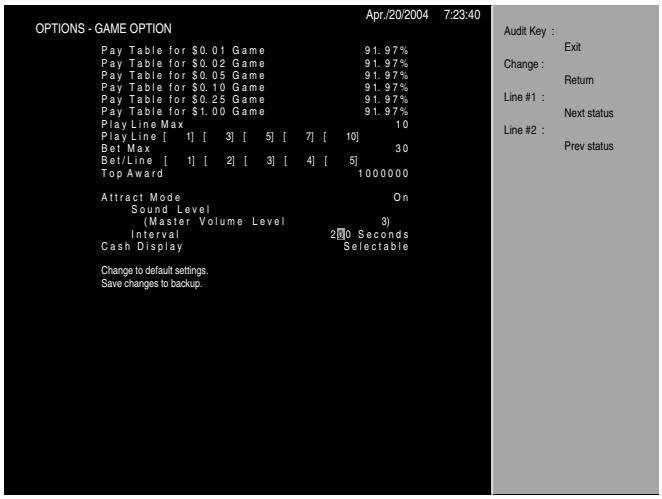

When setting up the value of the option, the ***CHANGE*** button returns to the item select screen, the ***SELECT 1 LINE*** button increments the selection once for each time pressed, the ***SELECT 2 LINES*** button decrements the selection once for each time pressed and the ***SELECT 3 LINES*** button moves the cursor to the next figure. To set the attract mode interval to 060, press the ***SELECT 3 LINES*** button twice to go to the first figure, press the ***SELECT 1 LINE*** button eight times to increment the first figure to 0. Press the ***SELECT 3 LINE*** button to go to the next figure. Press the ***SELECT 1 LINE*** button six times to increment the second figure to six then press the ***CHANGE*** button to return to the game options screen. Press the ***SELECT 1 LINE*** button to tab to the **CASH DISPLAY** field. Press the ***SELECT 3 LINES*** button to enter the selection. The following screen displays.

Setting Cash Display

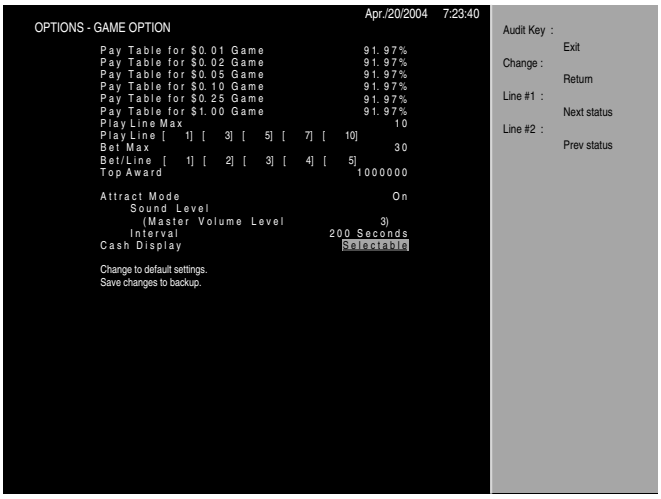

When setting up the value of the option, the ***CHANGE*** button returns to the item select screen, the ***SELECT 1 LINE*** button selects the next status and the ***SELECT 2 LINES*** button selects the previous status. To accept the default cash display value "selectable", press the ***CHANGE*** button to return to the game options screen. Press the button again to return to the main options screen. Press the ***SELECT 1 LINE*** button to tab to the **ACCOUNTING DENOM OPTION** field. The following screen displays.

Accounting Denom Option

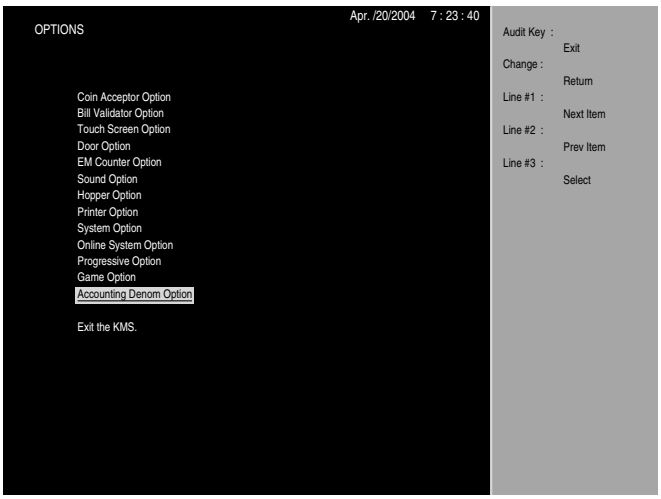

The **ACCOUNTING DENOM OPTION** field is highlighted. Press the ***SELECT 3 LINES*** button to enter the selection. The following screen displays.

Options-Accounting Denom Option

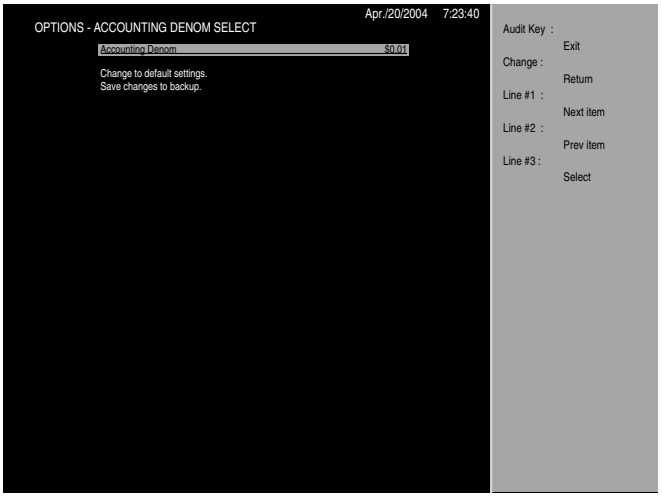

The audit key exits the K.M.S., the ***SELECT 1 LINE*** button moves to the next item, the ***SELECT 2 LINES*** button returns to the previous item and the ***SELECT 3 LINES*** enters the selection. The **ACCOUNTING DENOM** field is highlighted. Press the ***SELECT 3 LINES*** button to enter the selection. The following screen displays.

Setting Accounting Denom

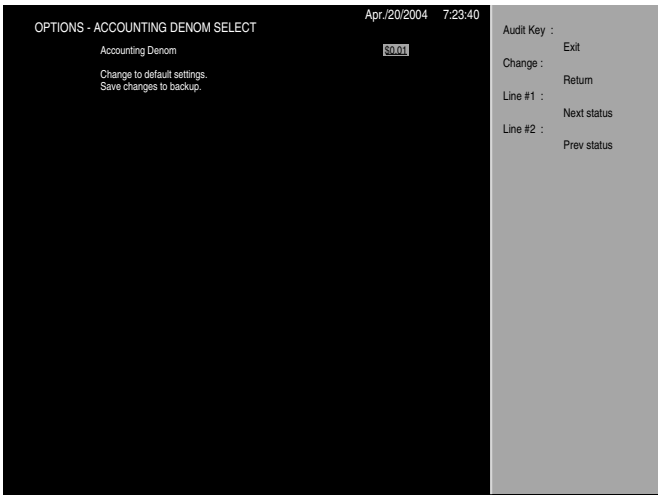

When setting up the value of the option, the ***CHANGE*** button returns to the item select screen, the ***SELECT 1 LINE*** button selects the next status and the ***SELECT 2 LINES*** button selects the previous status. To accept the default accounting denom value "$0.01", press the ***CHANGE*** button to return to the accounting denom options screen. Press the ***CHANGE*** button again to return to the options screen. Press the ***CHANGE*** button again to return to the main K.M.S. screen. Press the ***SELECT 1 LINE*** button to tab to the **DIAGNOSTIC** field. The following screen displays.

Diagnostic

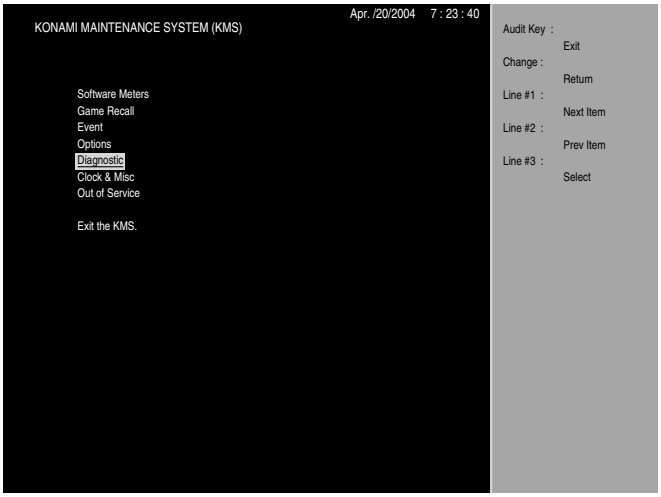

Checks the operation of the components of the game machine on the Diagnostic screen. The audit key exits the K.M.S., the ***SELECT 1 LINE*** button moves to the next item, the ***SELECT 2 LINES*** moves to the previous item and the ***SELECT 3 LINES*** button enters the item where the cursor is placed. The **DIAGNOSTIC** field is highlighted. Press the ***SELECT 3 LINES*** button to enter the selection. The following screen displays.

NOTE: All of the diagnostics tests can be performed with or without credits, in the middle of a game and depending on the tilt, in the middle of a tilt sequence.

DIAGNOSTIC	
Menu	**Description**
System Information	Displays information about the system.
Touch Screen	Checks the operation of the touch screen.
In-Port	Checks the operation of the in-port.
Out-Port	Checks the operation of the out-port.
Coin Acceptor	Checks the operation of the coin acceptor.
Bill Validator	Checks the operation of the bill validator.
Coin Hopper	Checks the operation of the coin hopper.
Ticket Printer	Checks the operation of the ticket printer.
CD-ROM Drive	Checks the operation of the CD-ROM drive.
Sound	Checks and changes the sound.
Screen	Displays the test screen.
Communication Information	Displays information about communication.
Game Test	Performs the tests associated with the game concerned.
I/O Test Extras	Checks the components other than the above.
Return to previous menu	Returns to the previous menu.

Diagnostic-Main Menu

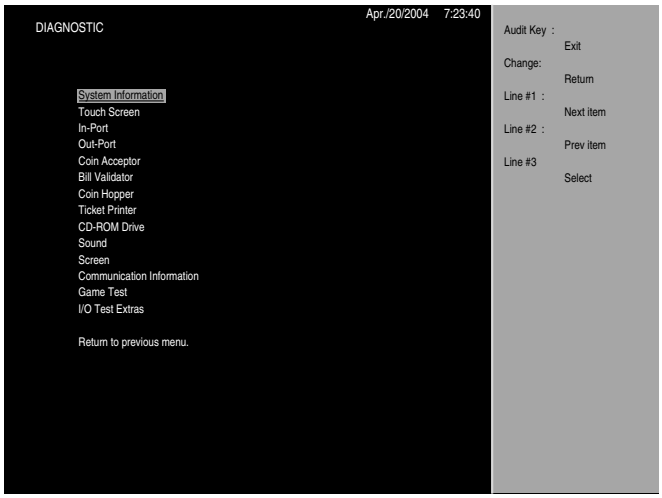

The audit key exits the K.M.S., the ***CHANGE*** button returns to the previous menu, the ***SELECT 1 LINE*** button moves to the next item, the ***SELECT 2 LINES*** moves to the previous item and the ***SELECT 3 LINES*** button enters the item where the cursor is placed. The **SYSTEM INFORMATION** field is highlighted. Press the ***SELECT 3 LINES*** button to enter the selection. The following screen displays.

Diagnostic-System Information

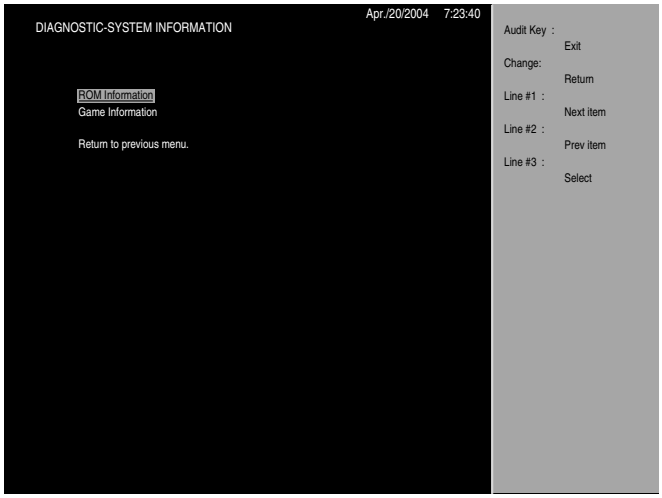

The audit key exits the K.M.S., the ***CHANGE*** button returns to the previous menu, the ***SELECT 1 LINE*** button moves to the next item, the ***SELECT 2 LINES*** moves to the previous item and the ***SELECT 3 LINES*** button enters the item where the cursor is placed. The **ROM INFORMATION** field is highlighted.

Press the ***SELECT 3 LINES*** button to enter the selection. The

following screen displays.

Diagnostic-System Information-ROM Information

SYSTEM INFORMATION	
Menu	**Description**
ROM Information	Displays information about the on-board ROM and EL Key.
Game Information	Displays information about the game.
Return to previous menu	Returns to the previous menu.

Displays information about the on-board ROM and EL Key. The audit key exits the K.M.S. and the ***CHANGE*** button returns to the previous menu.

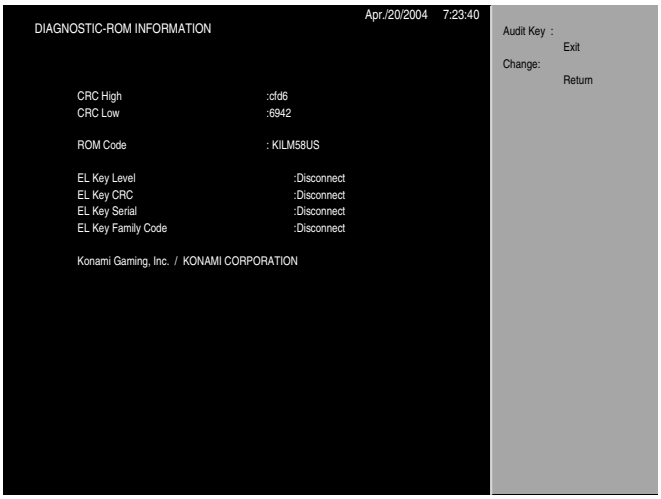

ROM INFORMATION	
Menu	**Description**
CRC High	CRC of the EPROM high.
CRC Low	CRC of the EPROM low.
ROM Code	ROM code stored in the program.
EL Key Level	EL Key security level stored in the EL Key.
EL Key CRC	CRC stored in the EL Key.
EL Key Serial	Serial number stored in the EL Key.
EL Key Family Code	Family code stored in the EL Key.

Press the ***CHANGE*** button to return to the system information menu. Press the ***SELECT 1 LINE*** button to tab to the **GAME INFORMATION** field. The following screen displays.

Diagnostic-Game Information

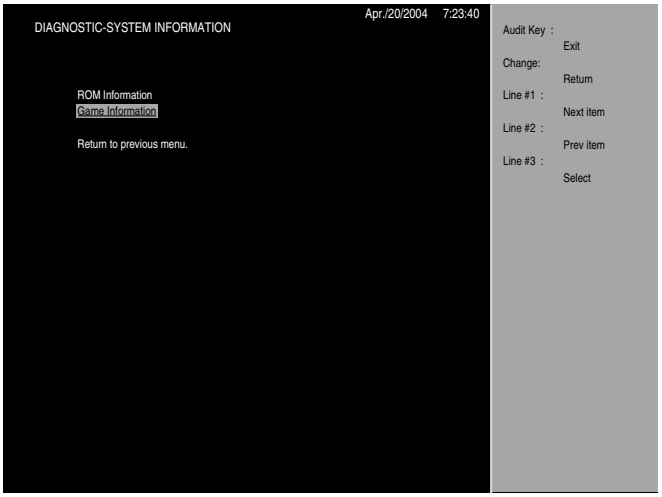

The audit key exits the K.M.S., the ***CHANGE*** button returns to the previous menu, the ***SELECT 1 LINE*** button moves the cursor to the next item, the ***SELECT 2 LINES*** moves the cursor to the previous item and the ***SELECT 3 LINES*** button enters the item where the cursor is placed. The **GAME INFORMATION** field is highlighted. Press the ***SELECT 3 LINES*** button to enter the selection. The following screen displays.

Diagnostic-Game Information

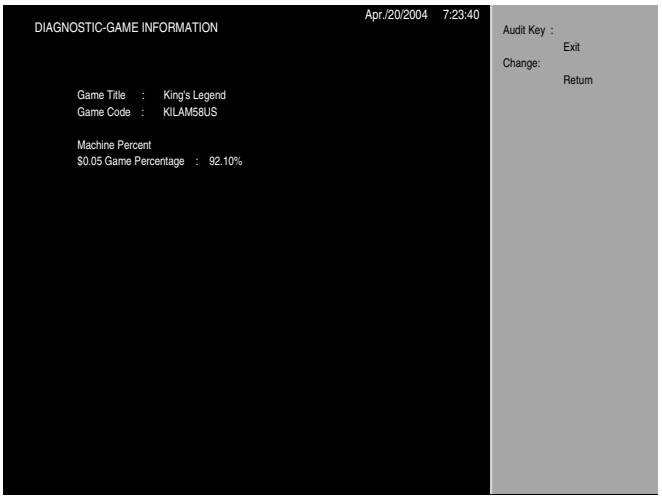

Displays information about the currently installed game. The audit key exits the K.M.S. and the ***CHANGE*** button returns to the previous menu. Press the ***CHANGE*** button to return to the system information menu. Press the ***CHANGE*** button again to return to the **DIAGNOSTIC** menu. Press the ***SELECT 1 LINE*** button to tab to the **TOUCH SCREEN** field. The following screen displays.

GAME INFORMATION	
Item	**Description**
Game Title	Name of the on-board game.
Game Code	Code of the on-board game.
Machine Percent	Machine payout percentage of the current game.

Diagnostic-Touch Screen

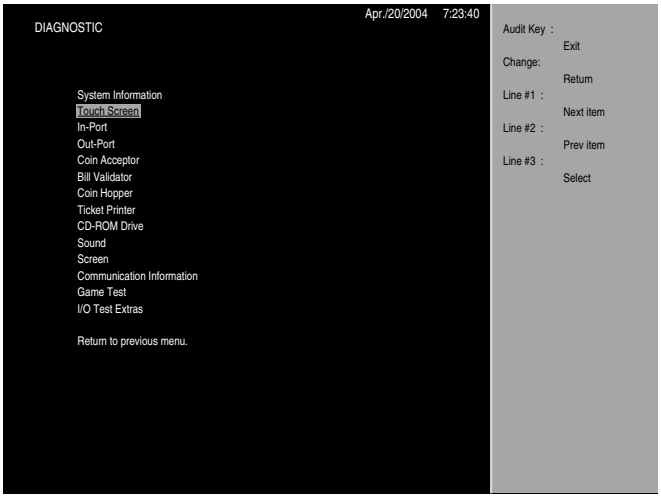

The audit key exits the K.M.S., the ***CHANGE*** button returns to the previous menu, the ***SELECT 1 LINE*** button moves the cursor to the next item, the ***SELECT 2 LINES*** moves the cursor to the previous item and the ***SELECT 3 LINES*** button enters the item where the cursor is placed. The **TOUCH SCREEN** field is highlighted. Press the ***SELECT 3 LINES*** button to enter the selection. The following screen displays.

Diagnostic-Touch Screen-Controller ID

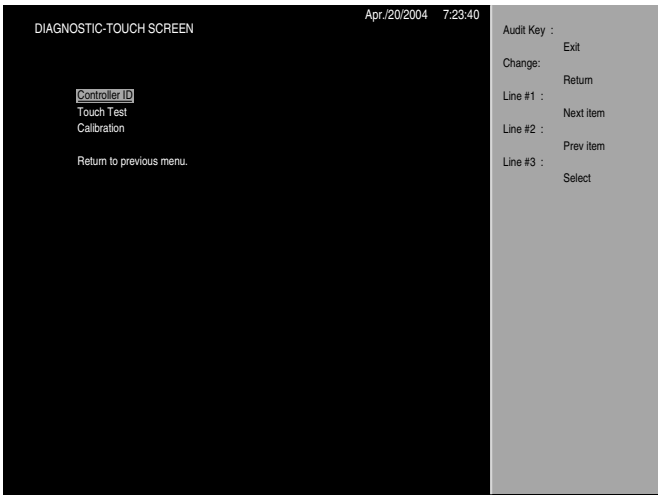

The audit key exits the K.M.S., the ***CHANGE*** button returns to the previous menu, the ***SELECT 1 LINE*** button moves the cursor to the next item, the ***SELECT 2 LINES*** moves the cursor to the previous item and the ***SELECT 3 LINES*** button enters the item where the cursor is placed. The **CONTROLLER ID** field is highlighted. Press the ***SELECT 3 LINES*** button to enter the the selection. The following screen displays.

Controller ID

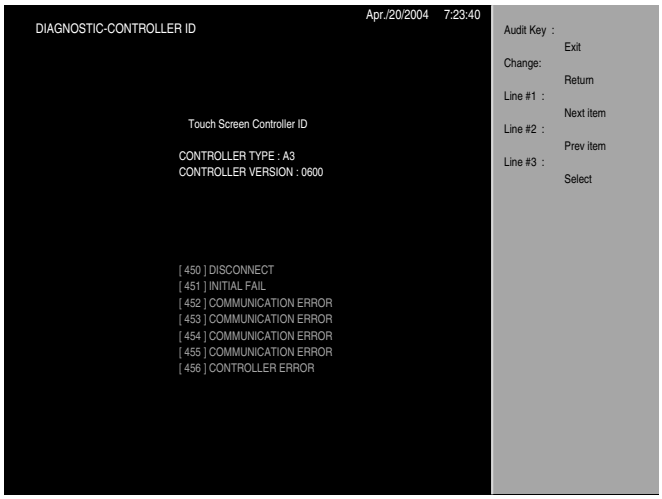

Displays information about the touchscreen controller.

The audit key exits the K.M.S. and the ***CHANGE*** button returns to the previous menu and the ***CASHOUT*** button resets any controller errors. Press the ***CHANGE*** button to return to the touchscreen menu. Press the ***SELECT 1 LINE*** button to tab to the **TOUCH TEST** menu. The following screen displays.

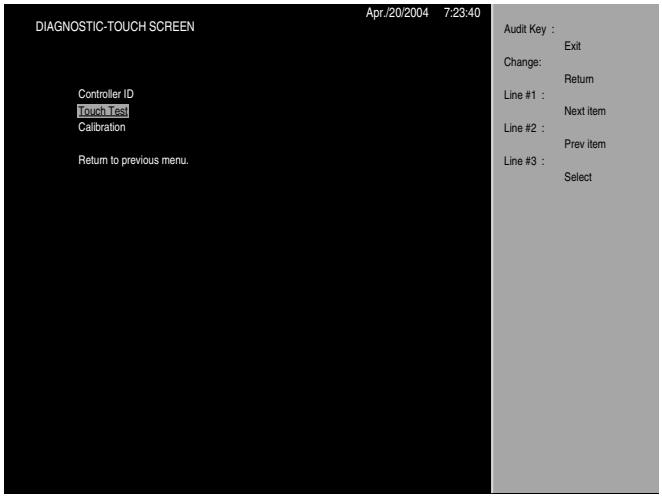

Diagnostic-Touch Screen-Touch Test

TOUCH SCREEN INFORMATION	
Item	**Description**
Controller ID	Checks the controller ID of the touch screen.
Touch Test	Touch Test
Calibration	Performs a location calibration of the touch screen.
Return to previous menu	Returns to the previous menu.

The audit key exits the K.M.S., the ***CHANGE*** button returns to

© 2004 KONAMI GAMING

the previous menu, the ***SELECT 1 LINE*** button moves to the next item, the ***SELECT 2 LINES*** moves to the previous item and the ***SELECT 3 LINES*** button enters the item where the cursor is placed. The **TOUCH TEST** field is highlighted. Press the ***SELECT 3 LINES*** button to enter the selection. The following screen displays.

Checks the operation of the touch screen. This screen lets you check the coordinate adjustment of the touch screen. A point will be displayed at the position where you touched with your finger. Any button returns to the previous menu. Press any button to return to the touchscreen menu. Press the ***SELECT 1 LINE*** button to tab to the **CALIBRATION** menu. The following screen displays.

Diagnostic-Touch Screen-Calibration

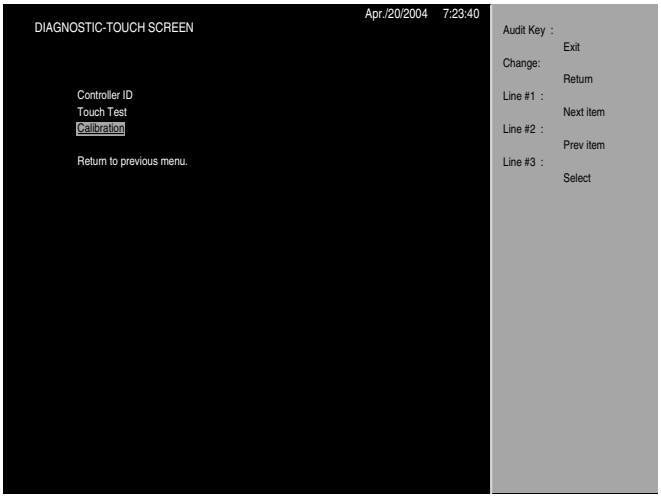

The audit key exits the K.M.S., the ***CHANGE*** button returns to the previous menu, the ***SELECT 1 LINE*** button moves to the next item, the ***SELECT 2 LINES*** moves to the previous item and the ***SELECT 3 LINES*** button enters the item where the cursor is placed. The **CALIBRATION** field is highlighted. Press the ***SELECT 3 LINES*** button to enter the selection. The following screen displays.

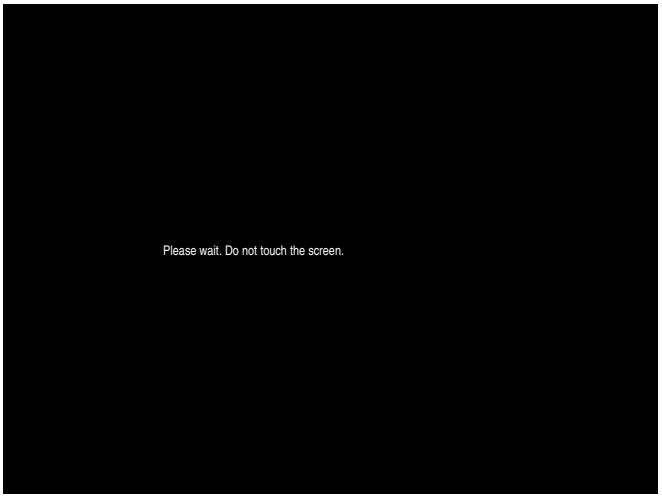

After a few seconds, the following screen displays.

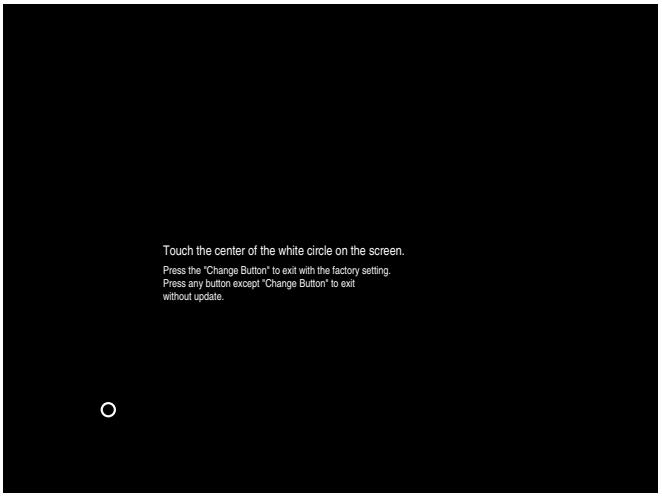

Touch the center of the white circle. The white circle will move to a different location on the screen. Continue touching the center until the following screen displays.

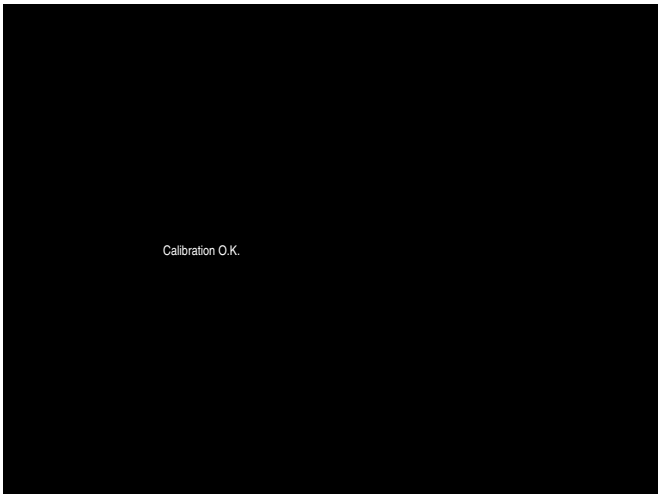

Press any button except the ***CASHOUT*** button to return to the touchscreen diagnostic menu. Press the ***CHANGE*** button to return to

the diagnostic menu screen. Press the ***SELECT 1 LINE*** button to tab to the **IN-PORT** menu. The following screen displays.

Diagnostic-In-Port

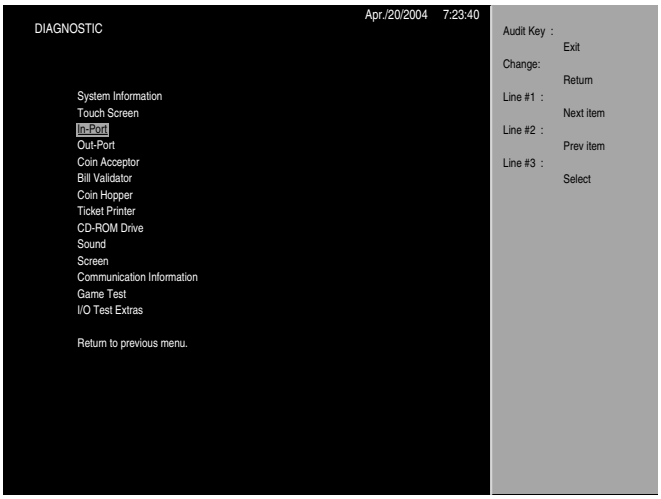

The audit key exits the K.M.S., the ***CHANGE*** button returns to the previous menu, the ***SELECT 1 LINE*** button moves to the next item, the ***SELECT 2 LINES*** moves to the previous item and the ***SELECT 3 LINES*** button enters the item where the cursor is placed. The **IN-PORT** field is highlighted. Press the ***SELECT 3 LINES*** button to enter the selection. The following screen displays.

IN-PORT	
Function	**Item**
Button	Cash Out Help Pay Table Language Menu Denomi Reserved Change Bet Max Cancel Bet Spin Gamble Take Win Line 1 Line 2 Line 3 Line 4 Line 5 Bet 1 Bet 2 Bet 3 Bet 4 Bet 5 Spare #24
Key Switch	Reset Key Audit Key JP Reset Key

IN-PORT	
Function	**Item**
Other Sensor or Switch	Door Lock Sensor Main Door Sub Door Bill Stacker Door Drop Door Cash Box Door Logic Unit Door Bill Stacker Exist Bill Transport Exist Bill Validator Power Coin Hopper Exist Ticket Printer Exist EM Counter Exist #1 EM Counter Exist #2 Fill Box Door Top Box Door Sensor Top Box Door Maintenance Sensor Maintenance Door

In-Port (Button/Mechanical Switch Test)

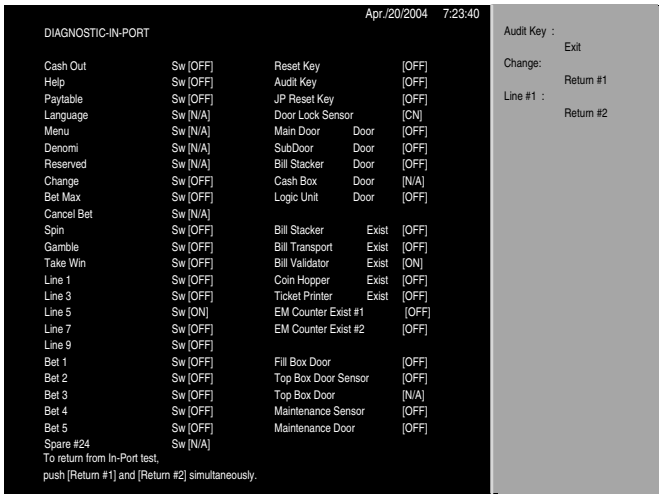

Checks the operation of the in-port. The indication of the applicable part changes from “OFF” to “ON”. “N/A” appears for the item not mounted. Press both the ***CHANGE*** and ***SELECT 1 LINE*** buttons to return to the diagnostic menu. Press the ***SELECT 1 LINE*** button to tab to the **OUT-PORT** field. The following screen displays.

Diagnostic-Out-Port

The audit key exits the K.M.S., the ***CHANGE*** button returns to the previous menu, the ***SELECT 1 LINE*** button moves to the next item, the ***SELECT 2 LINES*** moves to the previous item and the ***SELECT 3 LINES*** button enters the item where the cursor is placed. The **OUT-PORT** field is highlighted. The following screen displays.

Out-Port (Lamp Check)

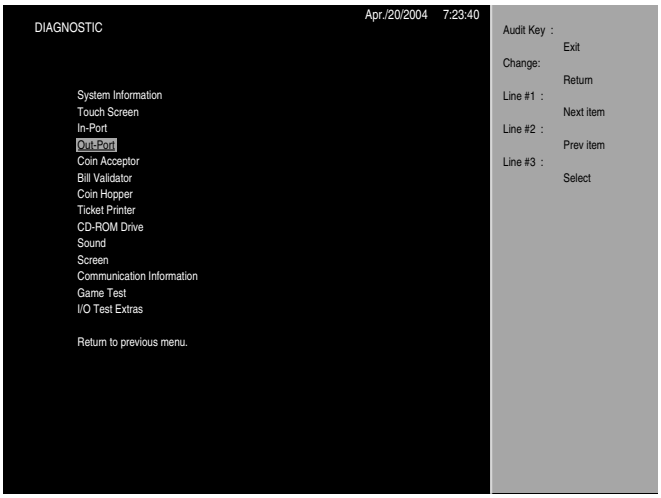

The audit key exits the K.M.S., the ***CHANGE*** button returns to the previous menu, the ***SELECT 1 LINE*** button moves to the next item, the ***SELECT 2 LINES*** moves to the previous item and the ***SELECT 3 LINES*** button enters the item where the cursor is placed.

OUT-PORT	
Function	**Item**
Button Lamp	Cash Out Help Pay Table Language Menu Denomination Reserved Change Bet Max Cancel Bet Spin Gamble Take Win Line 1 Line 2 Line 3 Line 4 Line 5 Bet 1 Bet 2 Bet 3 Bet 4 Bet 5 Spare #24

OUT-PORT	
Function	**Item**
LED	Bill Entry Indicator Bill Indicator Lamp 1 Bill Indicator Lamp 2 Bill Indicator Lamp 3 Bill Indicator Lamp 4 Bill Indicator Lamp 5 Bill Indicator Lamp 6 Bill Indicator Lamp 7
Other items	Candle #5 Candle #4 Candle #3 Candle #2 Candle #1 Fluorescent Lamp Coin Diverter

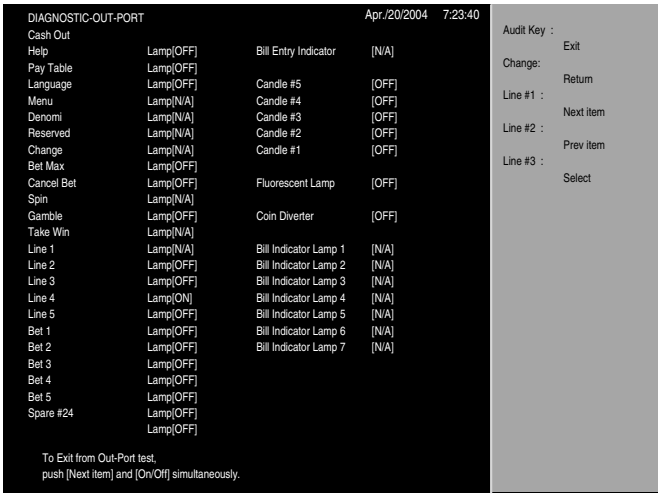

Checks the operation of the out-port. The indication of the applicable part changes from “OFF” to “ON”. “N/A” appears for the item not mounted. The ***SELECT 1 LINE*** button moves to the next item, the ***SELECT 2 LINES*** button moves to the previous item and the ***SELECT 3 LINES*** button switches the value of the item where the cursor is placed. Press both the ***SELECT 1 LINE*** and ***SELECT 3 LINES*** buttons returns to the diagnostic menu.

Press the ***SELECT 1 LINE*** button to tab to the **COIN ACCEPTOR** field. The following screen displays.

Diagnostic-Coin Acceptor

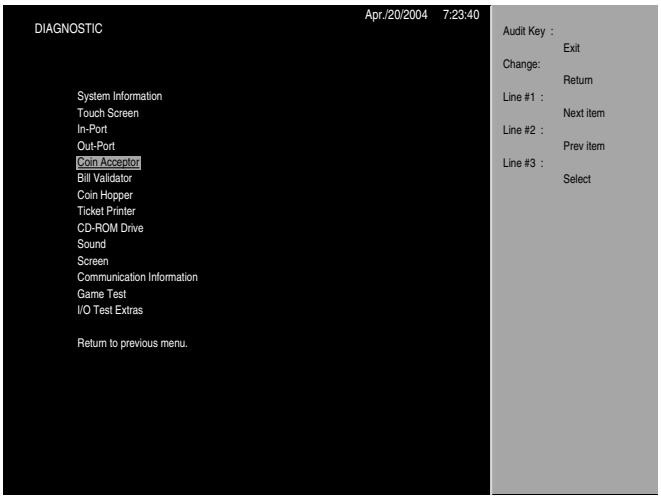

Checks the operation of the coin acceptor.

The audit key exits the K.M.S., the ***CHANGE*** button returns to the previous menu, the ***SELECT 1 LINE*** button moves to the next item, the ***SELECT 2 LINES*** moves to the previous item and the ***SELECT 3 LINES*** button enters the item where the cursor is placed. The **COIN ACCEPTOR ENABLE/DISABLE** field is highlighted. Press the ***SELECT 3 LINES*** button to enter the selection. The following screen displays.

COIN ACCEPTOR	
Item	**Description**
Coin Acceptor	Switches the coin acceptor status between the enable and disable.
Coin Diverter	Switches the coin diverter path status between the cash box and the coin hopper.
Coin In	Displays the number of coins inside.
Coin Drop In	Displays the number of coins inside the coin drop.
Fail Drop In	Displays the number of coins inside the coin drop in error.
Excessive Coin In	Displays the number of coins inserted after the coin acceptor stops accepting coins.
Acceptor In Pass Coin	Displays the number of coins that passed coin acceptor.
Coin In Upper Pass Coin	Displays the number of coins that passed coin in sensor upper.
Coin In Lower Pass Coin	Displays the number of coins that passed coin in sensor lower.

Diagnostic-Coin Acceptor-Enable/Disable

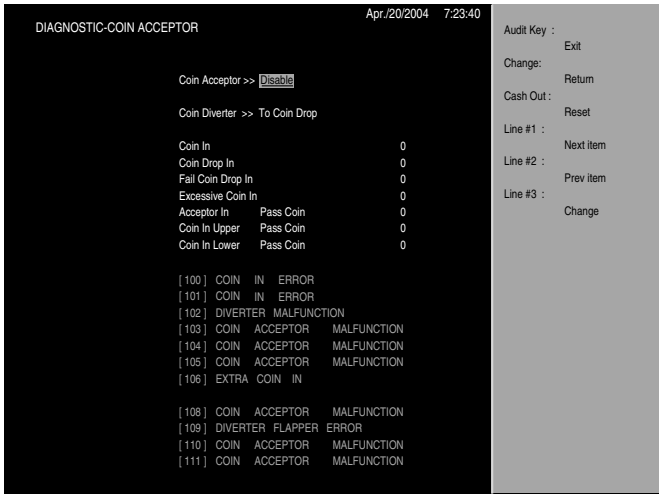

The audit key exits the K.M.S., the ***CHANGE*** button returns to the previous menu, the ***CASHOUT*** button resets the error counters, the ***SELECT 1 LINE*** button moves to the next item, the ***SELECT 2 LINES*** moves to the previous item and the ***SELECT 3 LINES*** button changes the item where the cursor is placed. The **COIN ACCEPTOR** field is highlighted. Press the ***SELECT 3 LINES*** button to alternate between enable and disable the coin acceptor. Press the ***SELECT 1 LINE*** button to tab to the **COIN DIVERTER** field. The following screen displays.

Diagnostic-Coin Diverter-To Coin Drop/Hopper

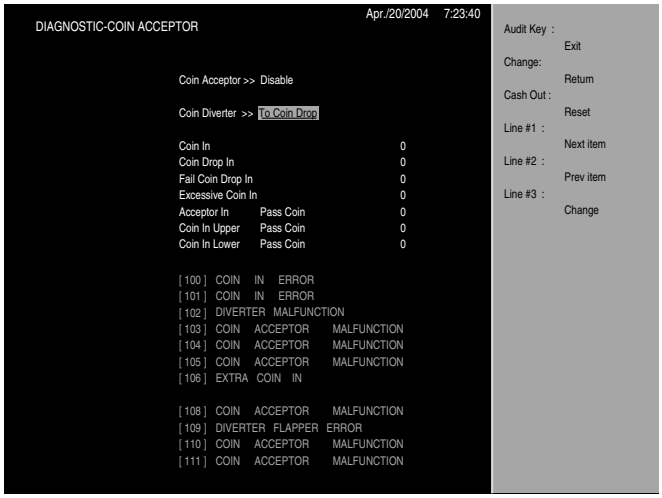

The audit key exits the KM.S., the ***CHANGE*** button returns to the previous menu, the ***CASHOUT*** button resets the error counters, the ***SELECT 1 LINE*** button moves to the next item, the ***SELECT 2 LINES*** moves to the previous item and the ***SELECT 3 LINES*** button changes the item where the cursor is placed. The **COIN DIVERTER** field is highlighted. Press the ***SELECT 3 LINES*** button to alternate between divert to coin drop and divert to coin hopper. Any coins inserted will increment the related meter once for each coin. Press the ***CASHOUT*** button to reset the meters to 0. Press the ***CHANGE*** button to return to the diagnostic menu. Press the ***SELECT 1 LINE*** button to tab to the **BILL VALIDATOR** field. The following screen displays.

Diagnostic-Bill Validator

```
DIAGNOSTIC                                                  Apr./20/2004   7:23:40

                                                            Audit Key :
                                                                        Exit
                                                            Change:
                                                                        Return
        System Information                                  Line #1 :
        Touch Screen                                                    Next item
        In-Port                                             Line #2 :
        Out-Port                                                        Prev item
        Coin Acceptor                                       Line #3 :
        Bill Validator                                                  Select
        Coin Hopper
        Ticket Printer
        CD-ROM Drive
        Sound
        Screen
        Communication Information
        Game Test
        I/O Test Extras

        Return to previous menu.
```

BILL VALIDATOR	
Item	**Description**
ROM Version	ROM version of the bill validator.
BOOT Version	Boot version of the ROM.
Bill Insert	Switches the bill validator state between enable and disable.
Bill In Escrow	Displays the amount of the inserted bill.
Total Bill	Displays the amount of the stored bill.
Bill Reject Status	Displays the status of the rejected bill.

Checks the operation of the bill validator. The audit key exits the K.M.S., the ***CHANGE*** button returns to the previous menu, the ***SELECT 1 LINE*** button moves to the next item, the ***SELECT 2 LINES*** moves the cursor to the previous item and the ***SELECT 3 LINES*** button enters the item where the cursor is placed. The **BILL VALIDATOR** field is highlighted. Press the ***SELECT 3 LINES*** button to enter the selection. The following screen displays.

```
DIAGNOSTIC-BILL VALIDATOR                                   Apr./20/2004   7:23:40

                                                            Audit Key :
                                                                        Exit
                                                            Change:
                                                                        Return
        ROM   Version:W(USA) - 12 - SS  ID003034V207-17 01APR02 3B13    Cash Out :
        BOOT Version : B12                                              Reset
                                                            Line #1 :
        Bill Insert     :Enable                                         Next item
        Bill In Escrow     :    $0                          Line #2 :
        Total Bill         :    $0                                      Prev item
        Vouchers           :     0                          Line #3 :
                                                                        Change
        Bill Reject Status  :  N/A

        [ 220 ]  BV NOT READY
        [ 221 ]  BV DEVICE FAILURE
        [ 222 ]  BILL JAM IN ACCEPTOR
        [ 223 ]  BILL JAM IN STACKER
        [ 224 ]  BILL    STACKER    FULL
        [ 225 ]  BILL    STACKER    REMOVED
        [ 226 ]  BILL    STACKER    NOT READY
        [ 227 ]  BILL    HEADER     REMOVED
        [ 228 ]  BILL    TRANSPORT REMOVED
        [ 229 ]  BV      COM
        [ 230 ]  BV      ERROR
        [ 231 ]  BV      ERROR
        [ 232 ]  BV      ERROR
```

The audit key exits the K.M.S., the ***CHANGE*** button returns to the previous menu, the ***CASHOUT*** button resets the error counters, the ***SELECT 3 LINES*** button changes the item where the cursor is placed. The **BILL VALIDATOR ENABLE/DISABLE** field is highlighted. Press the ***SELECT 3 LINES*** button to alternate between enable and disable the coin bill validator. When enabled and a bill is inserted, the following screen displays.

```
DIAGNOSTIC-BILL VALIDATOR                                   Apr./20/2004   7:23:40

        ROM   Version:W(USA) - 12 - SS  ID003034V207-17 01APR02 3B13    Line #1 :
        BOOT Version : B12                                                      Reject
                                                                        Line #2 :
        Bill Insert     :Enable                                                 Stack
        Bill In Escrow     :    $0                                      Line #3 :
        Total Bill         :    $0                                              Change
        Vouchers           :     0

        Bill Reject Status  :  N/A

        [ 220 ]  BV NOT READY
        [ 221 ]  BV DEVICE FAILURE
        [ 222 ]  BILL JAM IN ACCEPTOR
        [ 223 ]  BILL JAM IN STACKER
        [ 224 ]  BILL    STACKER    FULL
        [ 225 ]  BILL    STACKER    REMOVED
        [ 226 ]  BILL    STACKER    NOT READY
        [ 227 ]  BILL    HEADER     REMOVED
        [ 228 ]  BILL    TRANSPORT REMOVED
        [ 229 ]  BV      COM
        [ 230 ]  BV      ERROR
        [ 231 ]  BV      ERROR
        [ 232 ]  BV      ERROR
```

The **BILL IN ESCROW** field increments by the amount of the inserted bill. The bill can now be rejected by pressing the ***SELECT 1 LINE*** button, or it can be stacked by pressing the ***SELECT 2 LINES*** button. If stack is selected, the **TOTAL BILL** field will increment by the value if the inserted bill. Press the ***CHANGE*** button to return to the diagnostic menu. Press the ***SELECT 1 LINE*** button to tab to the **COIN HOPPER** field. The following screen displays.

Diagnostic-Coin Hopper

```
DIAGNOSTIC                                                  Apr./20/2004   7:23:40

                                                            Audit Key :
                                                                        Exit
                                                            Change:
                                                                        Return
        System Information                                  Line #1 :
        Touch Screen                                                    Next item
        In-Port                                             Line #2 :
        Out-Port                                                        Prev item
        Coin Acceptor                                       Line #3 :
        Bill Validator                                                  Select
        Coin Hopper
        Ticket Printer
        CD-ROM Drive
        Sound
        Screen
        Communication Information
        Game Test
        I/O Test Extras

        Return to previous menu.
```

Checks the operation of the coin hopper. The audit key exits the K.M.S., the ***CHANGE*** button returns to the previous menu, the ***SELECT 1 LINE*** button moves to the next item, the ***SELECT 2 LINES*** moves to the previous item and the ***SELECT 3 LINES*** button enters the item where the cursor is placed. The **COIN HOPPER** field is highlighted.Press the ***SELECT 3 LINES*** button to enter the selection. The following screen displays.

COIN HOPPER	
Item	**Description**
Coin Pay	Sets the number of coins to be paid.
Coin Paid	Displays the number of paid coins.
Total Paid	Displays the total number of paid coins.
Over Paid	Displays the number of overpaid coins.
Runaway Paid	Displays the number of runaway paid coins.
Over Flow Sensor	Full: The coin hopper is full. Not Full: The coin hopper is not full.
Coin Switch #1	Off/On.

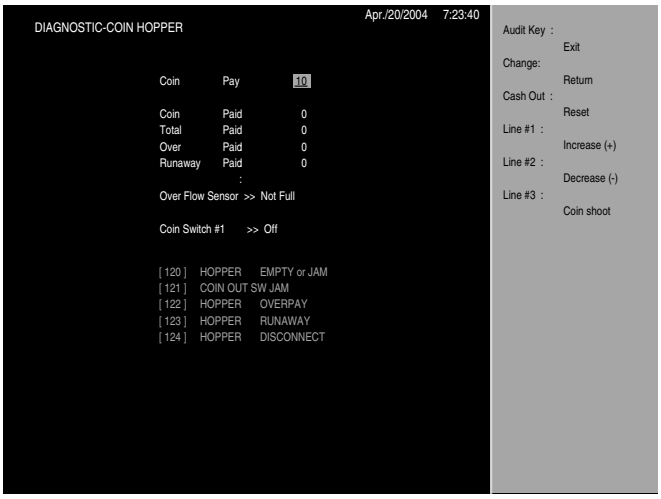

The audit key exits the K.M.S., the ***CHANGE*** button returns to the previous menu, the ***CASHOUT*** button resets all error counters, the ***SELECT 1 LINE*** button increments the selection once for each time pressed, the ***SELECT 2 LINES*** decrements the selection once for each time pressed and the ***SELECT 3 LINES*** button initiates the hopper test. Press the ***SELECT 1 LINE*** button to increment the **COIN PAY** field. Press the ***SELECT 3 LINES*** button to initiate the hopper test. Press the ***CHANGE*** button to return to the diagnostic menu. Press the ***SELECT 1 LINE*** button to tab to the **TICKET PRINTER** field. The following screen displays.

Diagnostic-Ticket Printer

Checks the operation of the ticket printer. The audit key exits the K.M.S., the ***CHANGE*** button returns to the previous menu, the ***SELECT 1 LINE*** button moves to the next item, the ***SELECT 2 LINES*** moves to the previous item and the ***SELECT 3 LINES*** button enters the item where the cursor is placed. The **TICKET PRINTER** field is highlighted. Press the ***SELECT 3 LINES*** button. The following screen displays.

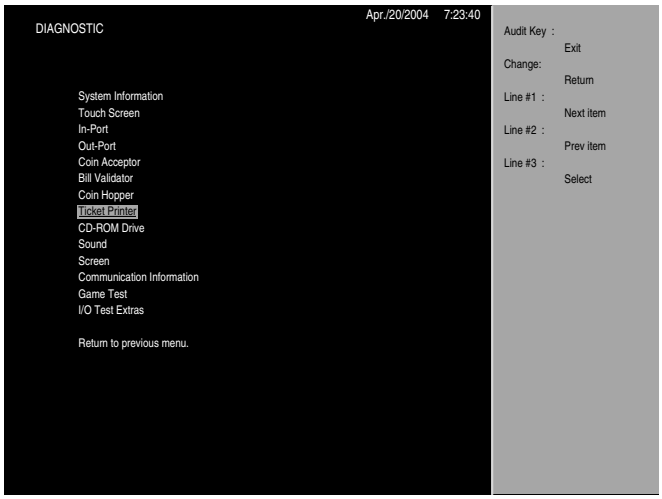

Diagnostic-Demonstration Print

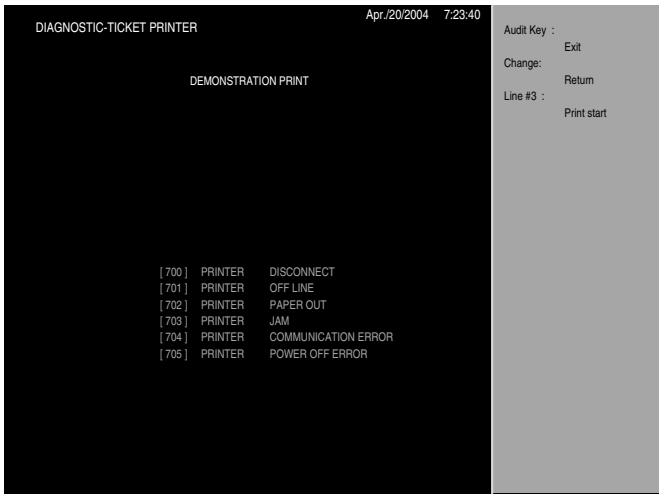

The audit key exits the K.M.S., the ***CHANGE*** button returns to the previous menu, and the ***SELECT 3 LINES*** button starts the demonstration print. Press the ***SELECT 3 LINES*** button. The following screen displays.

Diagnostic-Now Printing

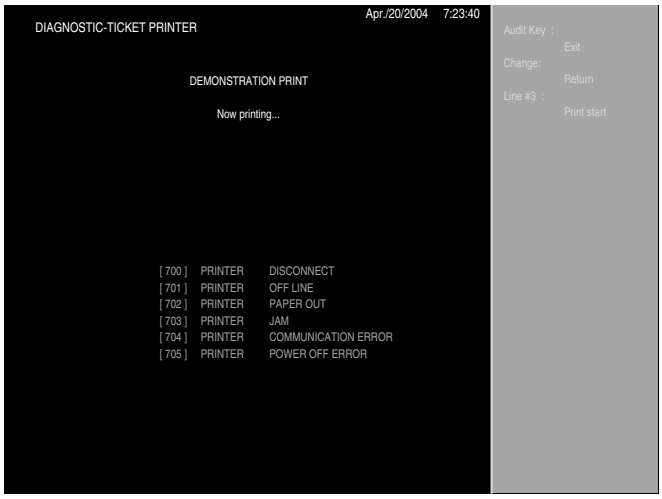

Diagnostic-Successful Print

After the ticket has been printed, the following screen displays.

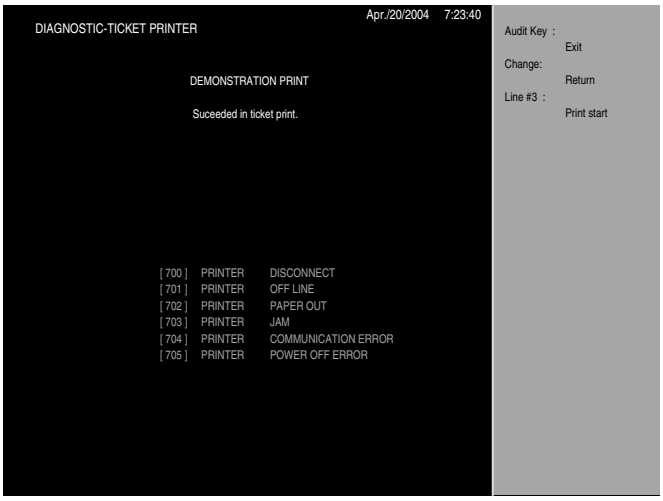

Two ticket are printed. See the illustration below for sample demonstration prints.

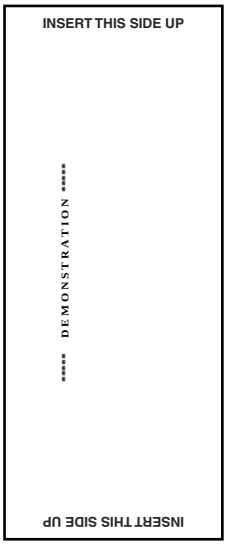

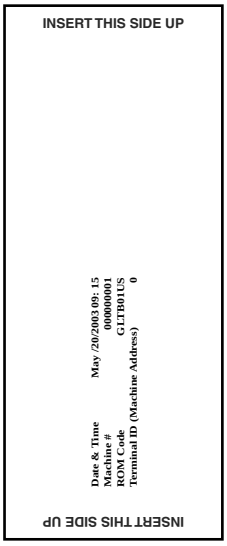

Failed Demonstration Print

If the print fails, the following screen displays. The error that caused the failure is highlighted.

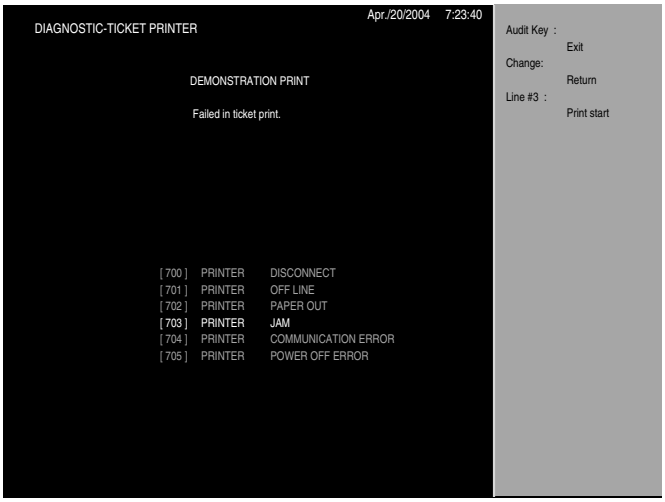

Press the ***CHANGE*** button to return to the diagnostic menu. Press the ***SELECT 1 LINE*** button to tab to the **CD-ROM DRIVE** field. The following screen displays.

Diagnostic-CD-ROM Drive

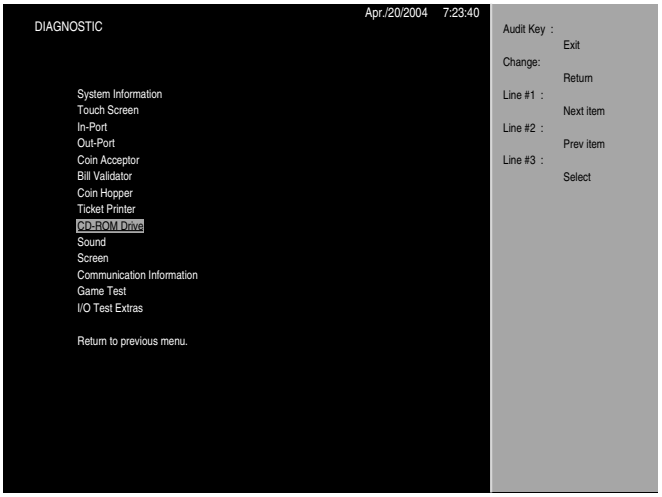

CD ROM DRIVE	
Item	**Description**
Device	Model information about the CD-ROM drive.
Speed	Speed of the CD-ROM drive.
Tray	Status of the locked tray.
Request Sense	Return status for request sense data to CD-ROM drive.
Medium Type	Type of medium in the CD-ROM drive.
Volume Name	Volume name of the CD -ROM

Checks the operation of the CD-ROM drive. The audit key exits

the K.M.S., the ***CHANGE*** button returns to the previous menu, the ***SELECT 1 LINE*** button moves to the next item, the ***SELECT 2 LINES*** moves to the previous item and the ***SELECT 3 LINES*** button enters the item where the cursor is placed. The **CD ROM DRIVE** field is highlighted. Press the ***SELECT 3 LINES*** button. The following screen displays.

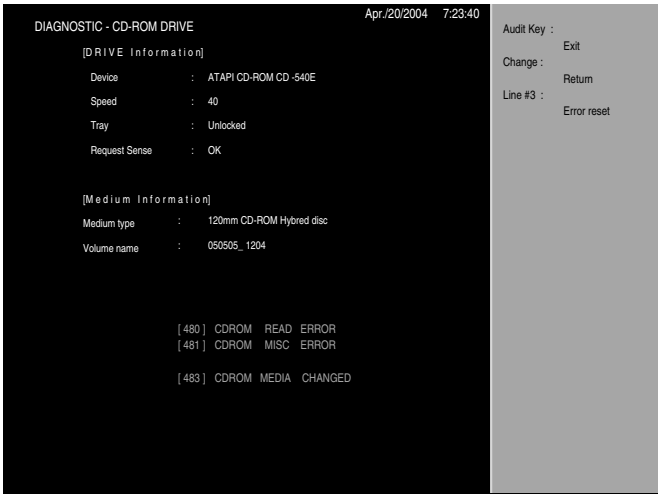

The audit key exits the K.M.S., the ***CHANGE*** button returns to the previous menu, and the ***SELECT 3 LINES*** button resets the error counters. Press the ***CHANGE*** button to return to the main diagnostic screen. Press the ***SELECT 1 LINE*** button to tab to the **SOUND** field. The following screen displays.

Diagnostic-Sound-Sound Volume

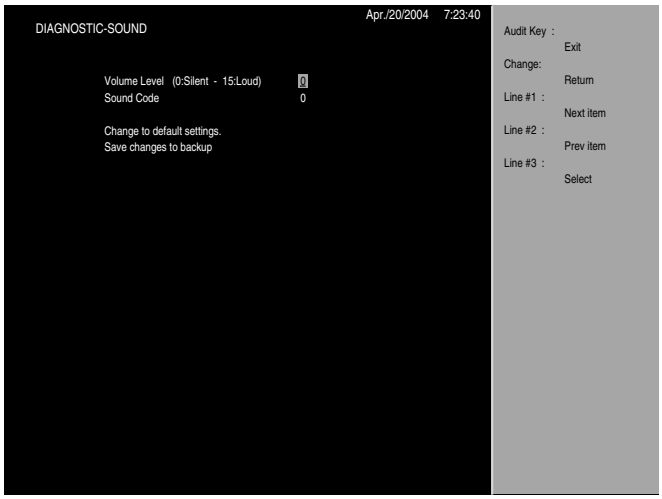

Checks the operation of the sound function. The audit key exits the K.M.S., the ***CHANGE*** button returns to the previous menu, the ***SELECT 1 LINE*** button increments the selection once for each time pressed, the ***SELECT 2 LINES*** decrements the selection once for each time pressed, the ***SELECT 3 LINES*** button plays the selected sound and the ***SELECT 4 LINES*** button stops playing the selected sound. Press the ***CHANGE*** button to return to the sound option menu. Press the ***SELECT 1 LINE*** button to tab to the **SOUND CODE** field. The following screen displays.

Diagnostic-Sound-Sound Code

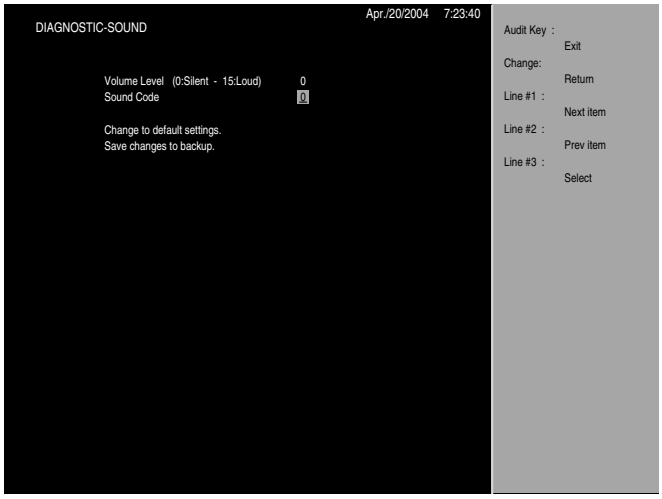

Checks the operation of the sound function. The audit key exits the K.M.S., the ***CHANGE*** button returns to the previous menu, the ***SELECT 1 LINE*** button increments the selection once for each time pressed, the ***SELECT 2 LINES*** decrements the selection once for each time pressed, the ***SELECT 3 LINES*** button plays the selected sound and the ***SELECT 4 LINES*** button stops playing the selected sound. Press the ***CHANGE*** button to return to the sound option menu. Press the ***CHANGE*** button again to return to the diagnostic menu. Press the ***SELECT 1 LINE*** button to tab to the **SCREEN** field. The following screen displays.

Diagnostic-Screen

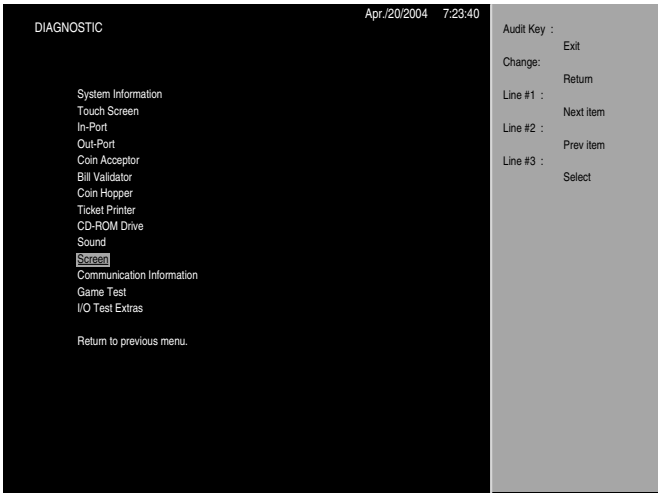

Checks the operation of the screen. The audit key exits the K.M.S., the ***CHANGE*** button returns to the previous menu, the ***SELECT 1 LINE*** button moves to the next item, the ***SELECT 2 LINES*** moves to the previous item and the ***SELECT 3 LINES*** button enters the item where the cursor is placed. The **COLOR BAR SCREEN** field is highlighted. Press the ***SELECT 3 LINES*** button. The following screen displays.

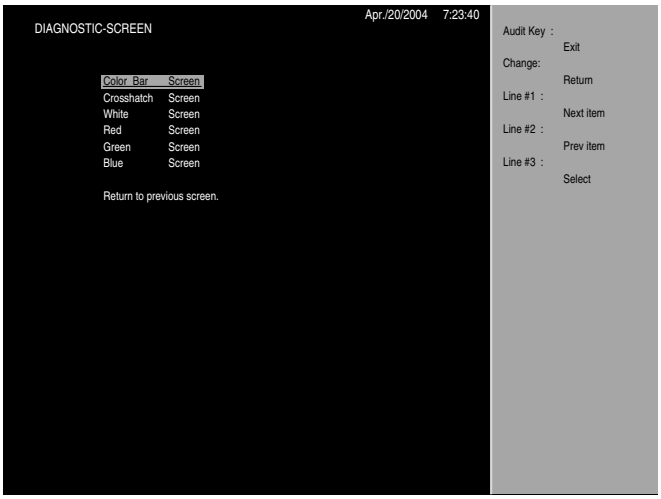

The **COLOR BAR SCREEN** field is highlighted. Press the ***SELECT 3 LINES*** button to enter the selection. The following screen displays.

Diagnostic-Screen-Color Bar Screen

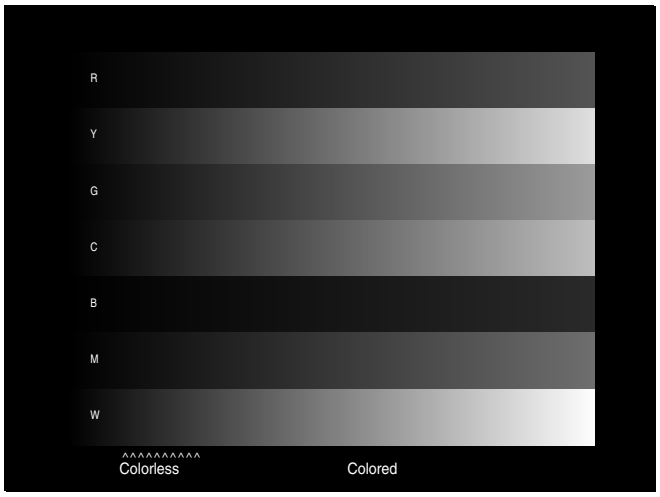

Any button returns to the previous menu. Press any button. Press the ***SELECT 1 LINE*** button to tab to the **CROSSHATCH** field. Press the ***SELECT 3 LINES*** button. The following screen displays.

Diagnostic-Screen-Crosshatch Screen

Any button returns to the previous menu. Press any button.

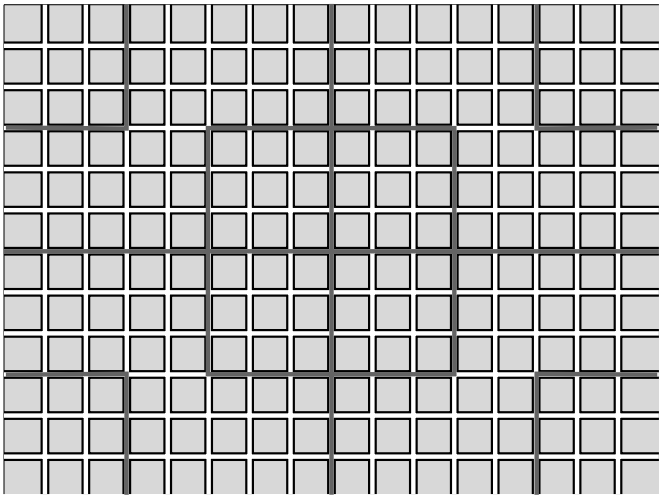

Use the same procedure to view the White, Red, Green and Blue screens. Press the ***CHANGE*** button to return to the diagnostic menu. Press the ***SELECT 1 LINE*** button to tab to the **COMMUNICATION** field. The following screen displays.

Diagnostic-Communication Information

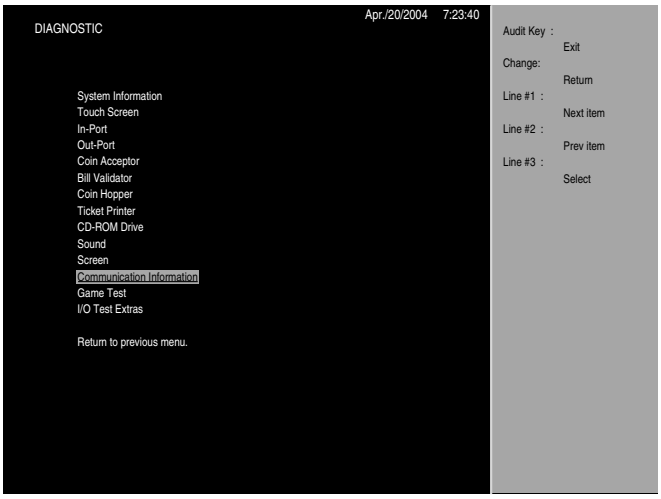

Checks the communication information. The audit key exits the K.M.S., the ***CHANGE*** button returns to the previous menu, the ***SELECT 1 LINE*** button moves to the next item, the ***SELECT 2 LINES*** moves to the previous item and the ***SELECT 3 LINES*** button enters the item where the cursor is placed. The **COMMUNICATION INFORMATION** field is highlighted. Press the ***SELECT 3 LINES*** button. The following screen displays.

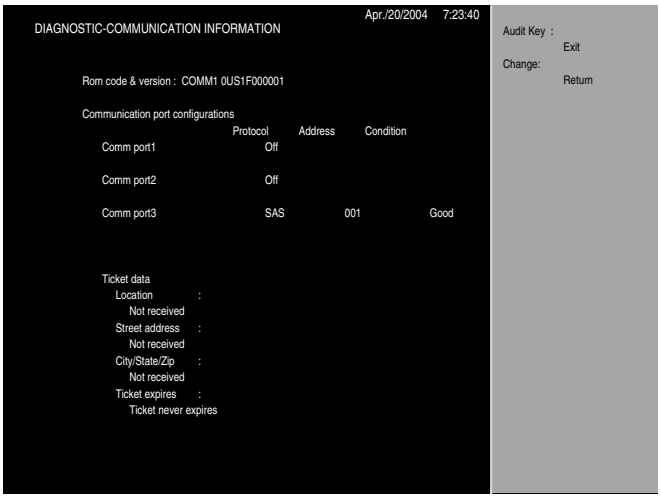

The audit key exits the K.M.S. and the ***CHANGE*** button returns to the previous menu. Press the ***CHANGE*** button to return to the diagnostic menu. Press the ***SELECT 1 LINE*** button to tab to the **GAME TEST** field. The following screen displays.

Diagnostic-Game Test

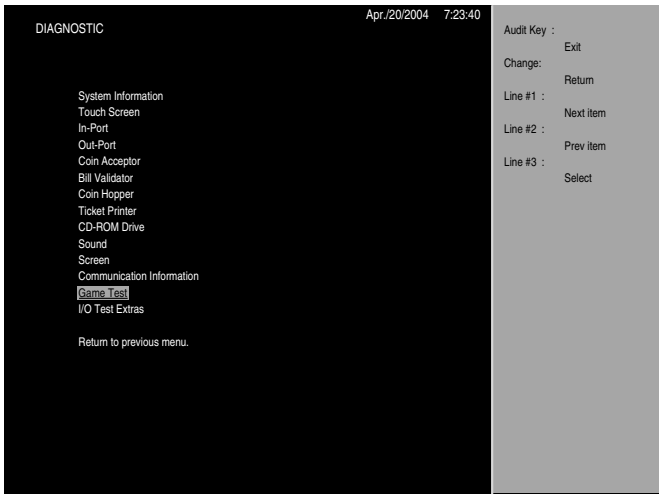

Checks the game. The audit key exits the K.M.S., the ***CHANGE*** button returns to the previous menu, the ***SELECT 1 LINE*** button moves to the next item, the ***SELECT 2 LINES*** moves to the previous item and the ***SELECT 3 LINES*** button enters the item where the cursor is placed. The **GAME TEST** field is highlighted. Press the ***SELECT 3 LINES*** button. The following screen displays.

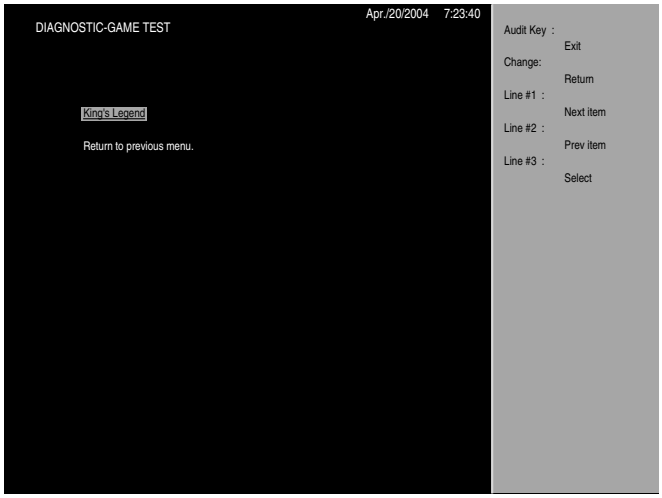

The audit key exits the K.M.S., the ***CHANGE*** button returns to the previous menu, the ***SELECT 1 LINE*** button moves to the next item, the ***SELECT 2 LINES*** button moves to the previous item and the ***SELECT 3 LINES*** button enters the item where the cursor is placed. The **KING'S LEGEND** field is highlighted. Press the ***SELECT 3 LINES*** button to enter the selection. The following screen displays.

NOTE: This screen is game specific and is subject to change depending on the installed game.

Diagnostic-Game Test-Reel 1 Position

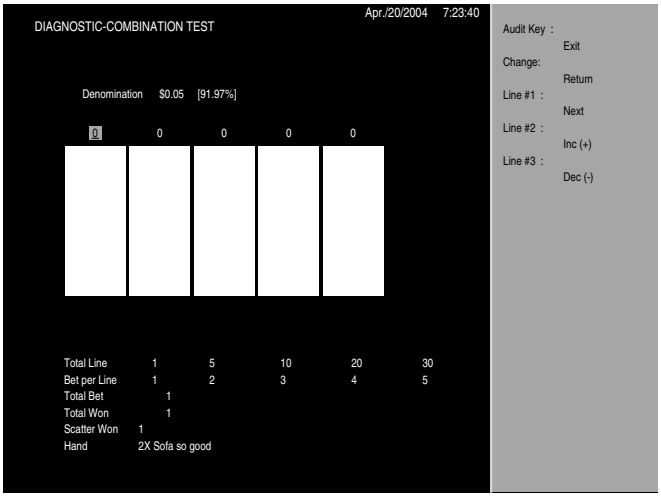

The audit key exits the K.M.S., the ***CHANGE*** button returns to the previous menu, the ***SELECT 1 LINE*** button moves the cursor to the next figure, the ***SELECT 2 LINES*** button increments the item once for each time pressed and the ***SELECT 3 LINES*** button decrements the item once for each time pressed. The reel symbols change to reflect the changed stop position and the total won displays the game outcome with stops selected. Press the ***SELECT 1 LINE*** button to move to the next item The following screen displays.

Diagnostic-Game Test-Reel 2 Position

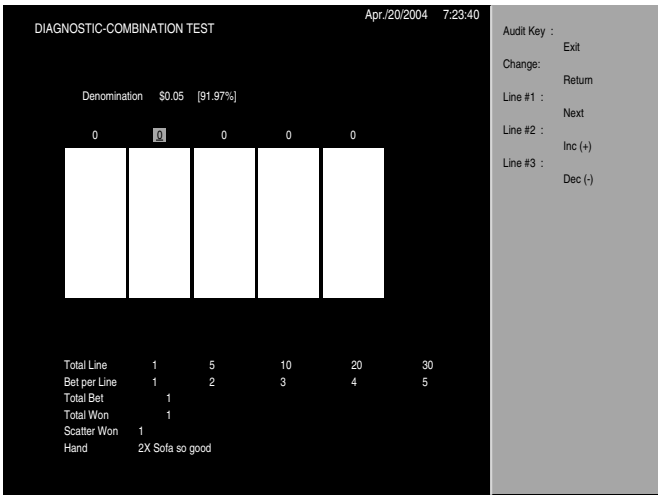

The audit key exits the K.M.S., the ***CHANGE*** button returns to the previous menu, the ***SELECT 1 LINE*** button moves the cursor to the next figure, the ***SELECT 2 LINES*** button increments the item once for each time pressed and the ***SELECT 3 LINES*** button decrements the item once for each time pressed. The reel symbols change to reflect the changed stop position and the total won displays the game outcome with stops selected. Press the ***SELECT 1 LINE*** button to move to the next item. The following screen displays.

Diagnostic-Game Test-Reel 3 Position

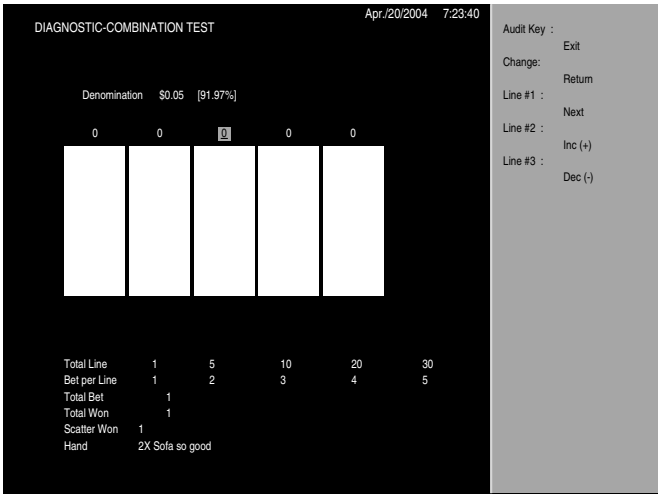

The audit key exits the K.M.S., the ***CHANGE*** button returns to the previous menu, the ***SELECT 1 LINE*** button moves the cursor to the next figure, the ***SELECT 2 LINES*** button increments the item once for each time pressed and the ***SELECT 3 LINES*** button decrements the item once for each time pressed. The reel symbols change to reflect the changed stop position and the total won displays the game outcome with stops selected. Press the ***SELECT 1 LINE*** button to move to the next item. The following screen displays.

Diagnostic-Game Test-Reel 4 Position

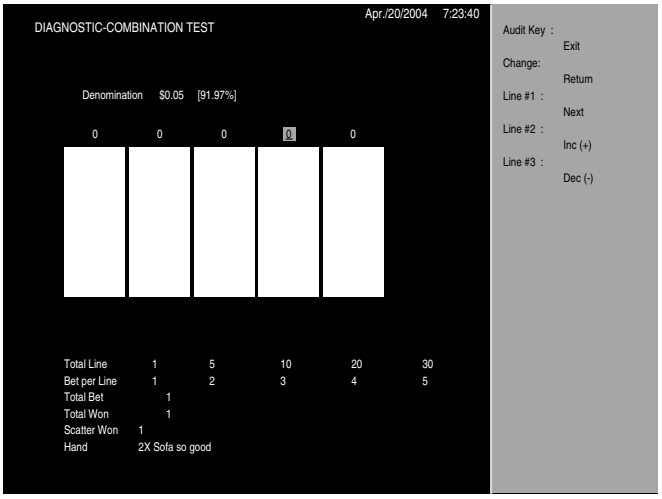

The audit key exits the K.M.S., the ***CHANGE*** button returns to the previous menu, the ***SELECT 1 LINE*** button moves the cursor to the next figure, the ***SELECT 2 LINES*** button increments the item once for each time pressed and the ***SELECT 3 LINES*** button decrements the item once for each time pressed. The reel symbols change to reflect the changed stop position and the total won displays the game outcome with stops selected. Press the ***SELECT 1 LINE*** button to move to the next item. The following screen displays.

Diagnostic-Game Test-Reel 5 Position

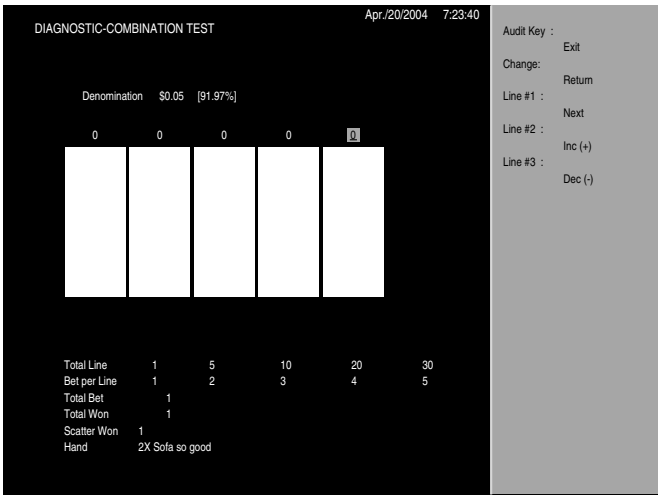

The audit key exits the K.M.S., the ***CHANGE*** button returns to the previous menu, the ***SELECT 1 LINE*** button moves the cursor to the next figure, the ***SELECT 2 LINES*** button increments the item once for each time pressed and the ***SELECT 3 LINES*** button decrements the item once for each time pressed. The reel symbols change to reflect the changed stop position and the total won displays the game outcome with stops selected. Press the ***SELECT 1 LINE*** button to move to the next item. The following screen displays.

Diagnostic-Game Test-Total Line

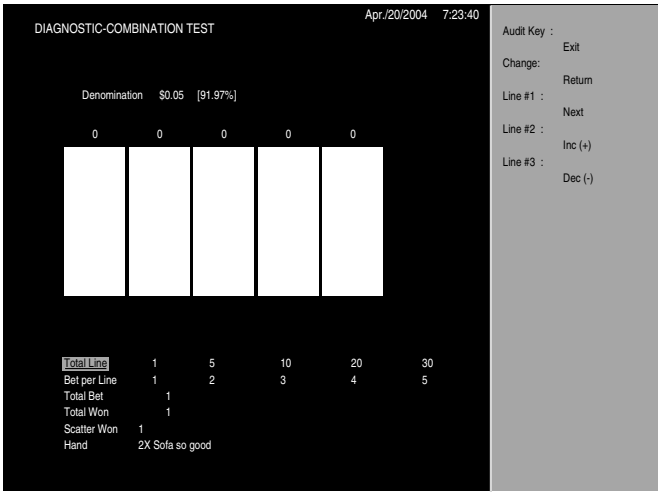

The audit key exits the K.M.S., the ***CHANGE*** button returns to the previous menu, the ***SELECT 1 LINE*** button moves the cursor to the next figure, the ***SELECT 2 LINES*** button increments the item once for each time pressed and the ***SELECT 3 LINES*** button decrements the item once for each time pressed. The total won displays the game outcome with the total line selected. Press the ***SELECT 1 LINE*** button to move to the next item. The following screen displays.

Diagnostic-Game Test-Bet Per Line

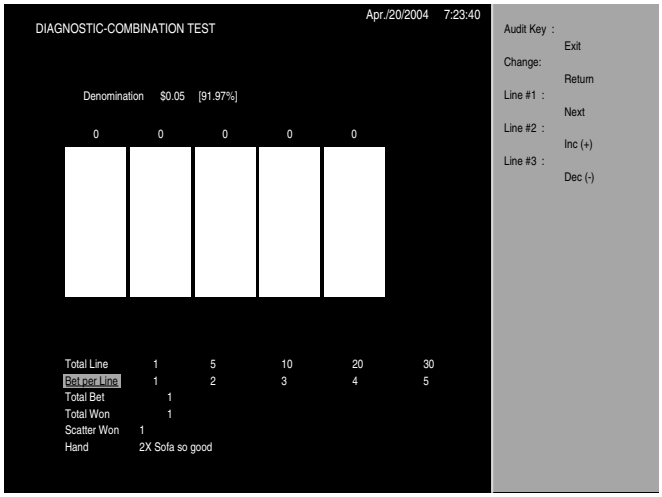

The audit key exits the K.M.S., the ***CHANGE*** button returns to the previous menu, the ***SELECT 1 LINE*** button moves the cursor to the next figure, the ***SELECT 2 LINES*** button increments the item once for each time pressed and the ***SELECT 3 LINES*** button decrements the item once for each time pressed. The total won displays the game outcome with the bet per line selected. Press the ***CHANGE*** button to move to combination test screen. Press the ***CHANGE*** button again to return to the days off screen and once more to return to the diagnostic menu. Press the ***SELECT 1 LINE*** button to tab to the **I/O TEST EXTRAS** field. The following screen displays.

Diagnostic-I/O Test Extras

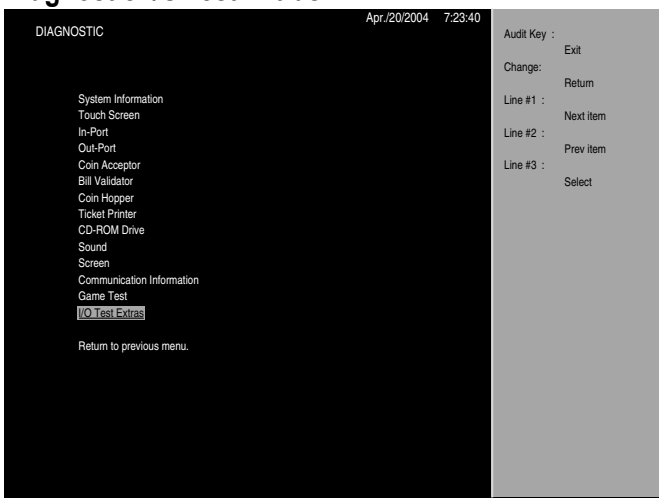

I/O TEST EXTRAS	
Item	**Description**
EM Counter	Checks the operation of the EM counter.
Prog. & SDS	Outputs the progressive port signal and SDS signal.
UART	Checks the UART (Universal Asynchronous Receiver Transmitter).
Option In-Port	Checks the operation of the in-port.

© 2004 KONAMI GAMING

I/O TEST EXTRAS	
Item	**Description**
Option Out-Port	Checks the operation of the out-port.
Return to previous menu	Returns to the previous menu.

Checks the operation of the EM counter, the UART, the option-in port and the option out-port. The audit key exits the K.M.S., the ***CHANGE*** button returns to the previous menu, the ***SELECT 1 LINE*** button moves to the next item, the ***SELECT 2 LINES*** moves to the previous item and the ***SELECT 3 LINES*** button enters the item where the cursor is placed. The **I/O TEST EXTRAS SCREEN** field is highlighted. Press the ***SELECT 3 LINES*** button. The following screen displays.

Diagnostic-I/O Test Extras-EM Counter

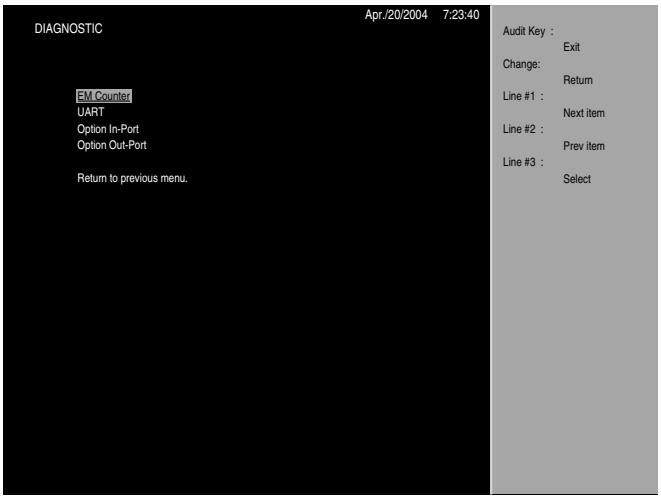

Checks the operation of the EM counter. The audit key exits the K.M.S., the ***CHANGE*** button returns to the previous menu, the ***SELECT 1 LINE*** button moves to the next item, the ***SELECT 2 LINES*** moves to the previous item and the ***SELECT 3 LINES*** button enters the item where the cursor is placed. The **EM COUNTER** field is highlighted. Press the ***SELECT 3 LINES*** button. The following screen displays.

EM Counter

Increments the EM counters 1-5 where the cursor is placed by one using the ***SELECT 3 LINES*** button. The audit key exits the K.M.S, the ***CHANGE*** button returns to the previous menu. The ***CASH OUT*** button resets the EM counter error. The ***SELECT 1 LINE*** button moves the cursor to the next item. The ***SELECT 2 LINES*** button moves the cursor to the previous item. The ***SELECT 3 LINES*** button increments the EM counter. Use the preceding procedure to increment EM counters 2-5. Press the ***CHANGE*** button to return to the I/O test extras screen. Press the ***SELECT 1 LINE*** button to tab to the **UART** field. The following screen displays.

Diagnostic-I/O Test Extras-UART

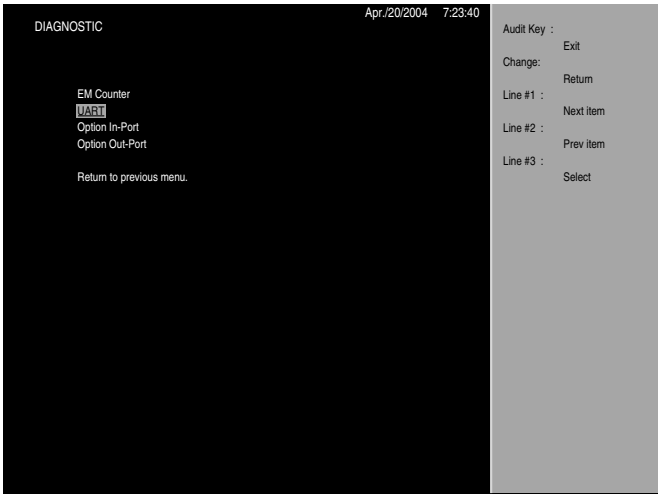

Checks the operation of the Universal Asynchronous Receiver Transmitter. The audit key exits the K.M.S., the ***CHANGE*** button returns to the previous menu, the ***SELECT 1 LINE*** button moves to the next item, the ***SELECT 2 LINES*** moves to the previous item and the ***SELECT 3 LINES*** button enters the item where the cursor is placed. The **UART** field is highlighted. Press the ***SELECT 3 LINES*** button. The following screen displays.

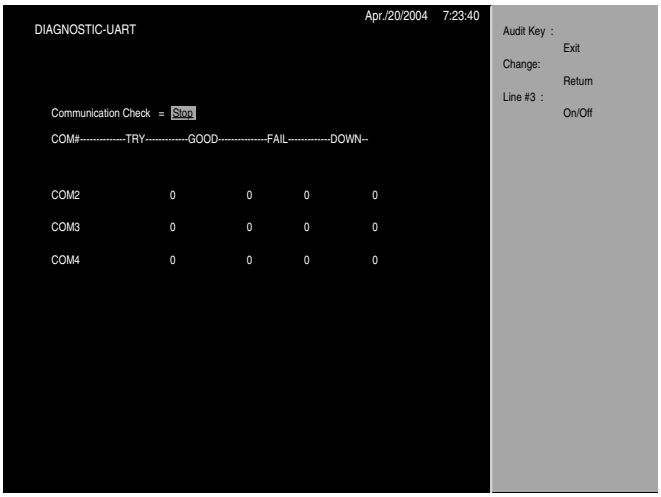

The audit key exits the K.M.S., the ***CHANGE*** button returns to the previous menu and the ***SELECT 3 LINE*** button initiates the UART test. Press the ***CHANGE*** button to return to the I/O test extras screen. Press the ***SELECT 1 LINE*** button to tab to the **OPTION IN-PORT** field. The following screen displays.

Diagnostic-I/O Test Extras-Option In-Port

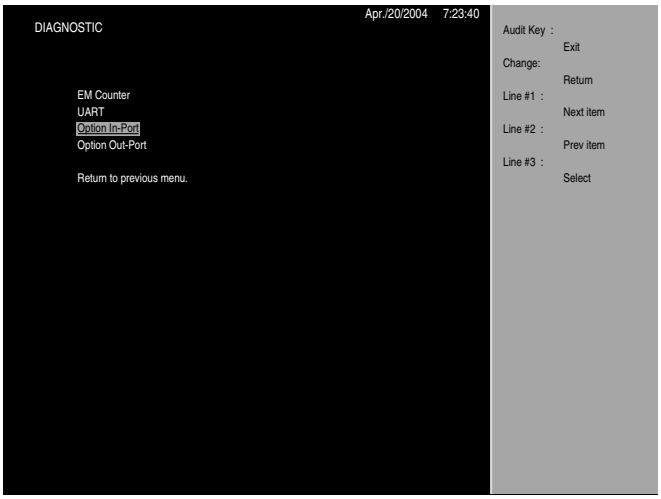

Checks the operation of the in-port. The audit key exits the K.M.S., the ***CHANGE*** button returns to the previous menu, the ***SELECT 1 LINE*** button moves the cursor to the next item, the ***SELECT 2 LINES*** moves the cursor to the previous item and the ***SELECT 3 LINES*** button enters the item where the cursor is placed. The **OPTION IN-PORT** field is highlighted. Press the ***SELECT 3 LINES*** button. The following screen displays.

OPTION IN PORT
Port
Under Flow Sensor
Coin Switch #2
Coin Acceptor Tilt
Coin Acceptor Sense
Coin Acceptor Credit
Coin Drop Sensor #1
Coin Drop Sensor #2
Coin Drop Sensor #3
Coin Drop Sensor #4
Coin Reserved
Bill Validator Failure
Bv Reserved #1
Bv Reserved #2
Printer Failure
Printer Paper Low
Printer Paper Carrier5
Printer Paper Carrier4
Printer Paper Carrier3
Printer Paper Carrier2
Printer Paper Carrier1
Handle Home
Handle Start
Handle Return
Circuit Breaker 24vDC-1
Circuit Breaker 24vDC-2
Circuit Breaker 24vDC-3

Option In-Port

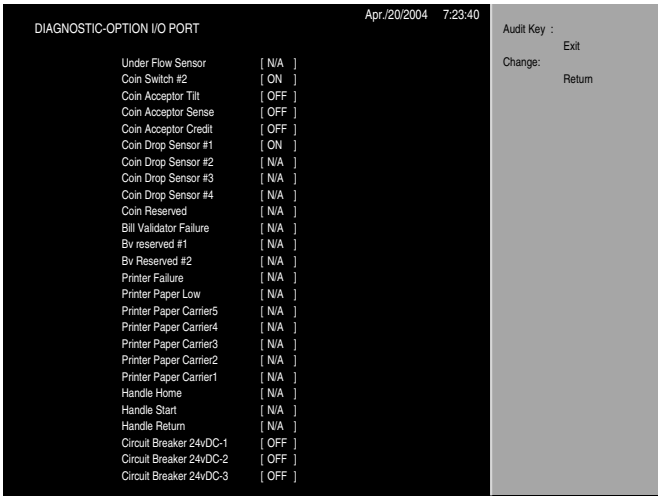

Checks the operation of the in-port. The indication of the applicable part changes from “OFF” to “ON”. “N/A” appears for the item not mounted. The audit key exits the K.M.S. and the ***CHANGE*** button returns to the previous menu. Press the ***CHANGE*** button to return to the I/O test extras screen. Press the ***SELECT 1 LINE*** button to tab to the **OPTION OUT-PORT** field. The following screen displays.

Diagnostic-I/O Test Extras-Option Out-Port

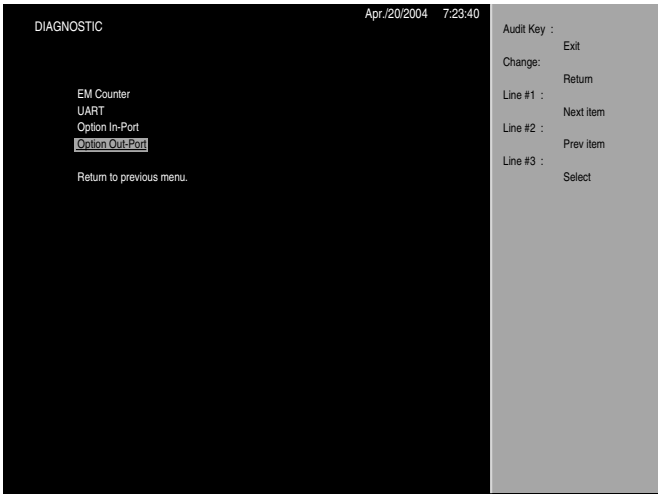

The audit key exits the K.M.S., the ***CHANGE*** button returns to the previous menu, the ***SELECT 1 LINE*** button moves to the next item, the ***SELECT 2 LINES*** button moves to the previous item and the ***SELECT 3 LINES*** button selects the item where the cursor is placed.

OPTION-OUT PORT
Port
Hopper Escalator
Hopper Brake
Hopper Reverse
Power Save Fl Lamp
Power Save Screen
Handle Solenoid

Option Out-Port

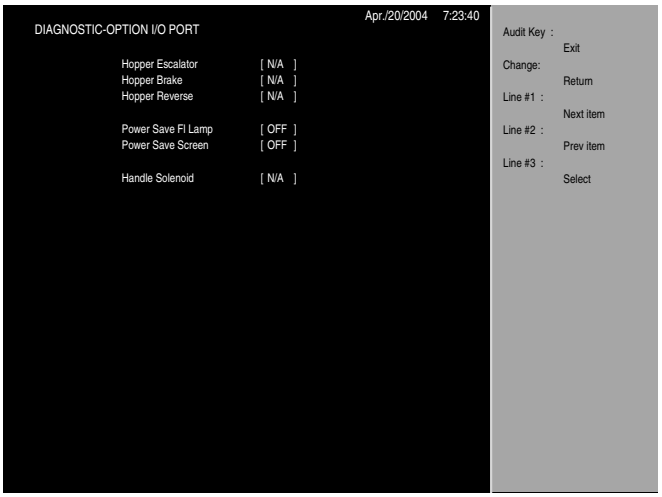

Checks the operation of the out-port. The indication of the applicable part changes from “OFF” to “ON”. “N/A” appears for the item not mounted. The audit key exits the K.M.S., the ***CHANGE*** button returns to the previous menu, the ***SELECT 1 LINE*** button moves to the next item, the ***SELECT 2 LINES*** button moves to the previous item and the ***SELECT 3 LINES*** button selects the item where the cursor is placed. Press the ***CHANGE*** button to return to the I/O test extras screen. Press the ***CHANGE*** button again to return to the diagnostic menu. Press the ***CHANGE*** button again to return to the K.M.S. menu. Press the ***SELECT 1 LINE*** button to tab to the **CLOCK & MISC.** field. The following screen displays.

Clock & Misc.

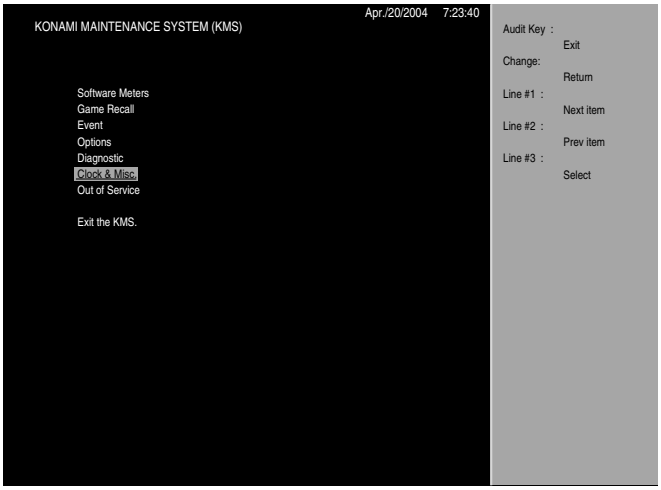

The audit key exits the K.M.S., the ***CHANGE*** button returns to the previous menu, the ***SELECT 1 LINE*** button moves to the next item, the ***SELECT 2 LINES*** button moves to the previous item and the ***SELECT 3 LINES*** button selects the item where the cursor is placed. Press the ***SELECT 3 LINES*** button to enter the selection. The following screen displays.

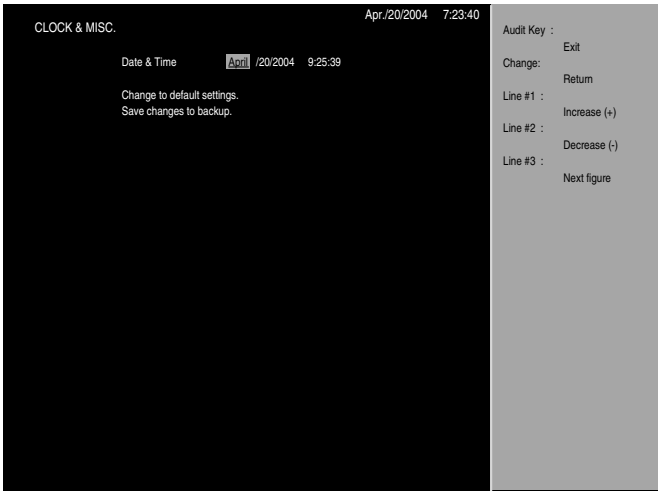

Checks and changes the date and time of the internal clock and other data setting. Date & Time Inputs the date and time of the internal clock in the following format: month/day/year hour:minute:second

When the item is selected, the audit key exits the K.M.S., the ***CHANGE*** button returns to the previous menu. The ***SELECT 1 LINE*** button moves the cursor to the next item. The ***SELECT 2 LINES*** button moves the cursor to the previous item. The ***SELECT 3 LINES*** button selects the item where the cursor is placed.

When setting up the value of an option, the audit key exits the K.M.S., the ***CHANGE*** button returns to the item select screen, the ***SELECT 1 LINE*** button increments the value once for each time pressed on the cursor. The ***SELECT 2 LINES*** button decrements the value once for each time pressed and the ***SELECT 3 LINES*** button moves to the next figure. Set the clock, then press the ***CHANGE*** button to return to the K.M.S. menu. Press the ***SELECT 1 LINE*** button to tab to the **OUT OF SERVICE** field. The following screen displays.

Out of Service

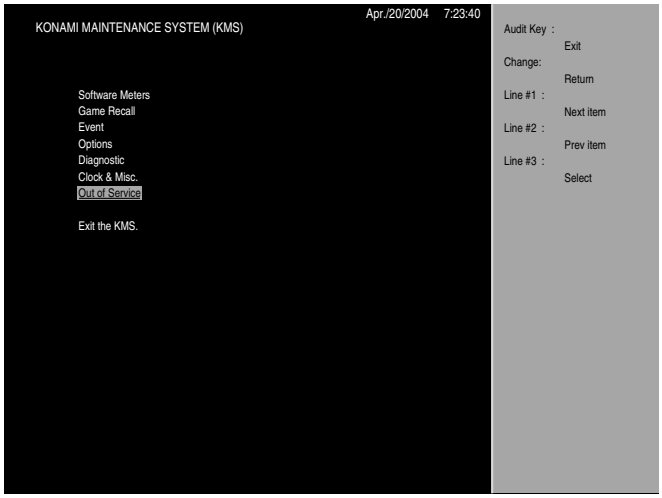

The audit key exits the K.M.S., the ***CHANGE*** button returns to the previous menu, the ***SELECT 1 LINE*** button moves the cursor to the next item, the ***SELECT 2 LINES*** button moves the cursor to the previous item and the ***SELECT 3 LINES*** button selects the item where the cursor is placed. Press the ***SELECT 3 LINES*** button. The following screen displays.

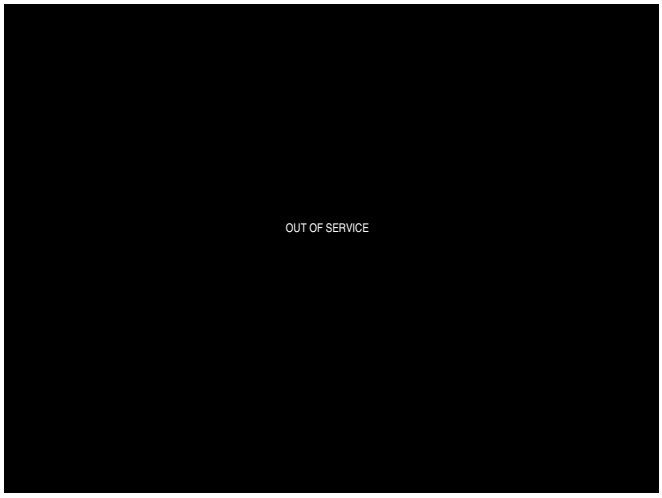

Displays “Out of Service” message and locks the machine.

When “Out of Service” message appears on this screen, no machine function is allowed. Turn the Reset Key Switch (returns to the previous menu) or Audit Key (returns to the game screen).

Jumper Sockets

The options on the cabinet, including the bill validator, are set by the jumper sockets on each board. This section describes the jumper sockets and how to set each option.

I/O Drive A Board (IOAB-2)

JP2, JP3 and JP4:

Selects the required special drive circuit when the WBS-11-SS is used as a bill validator. All the jumper sockets must be the same setting.

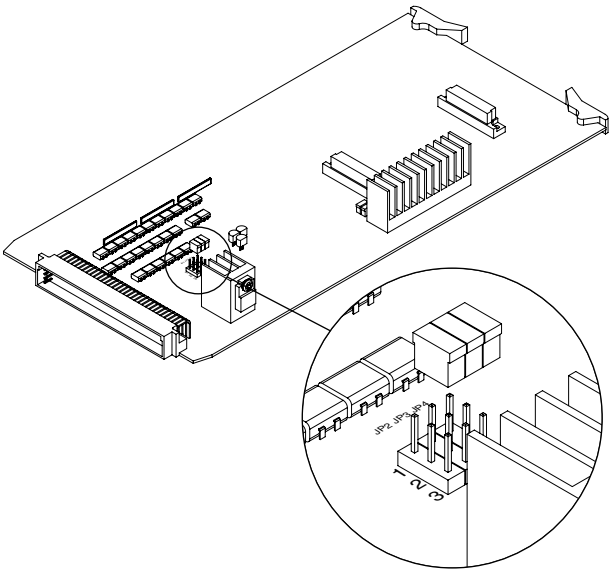

JP2, 3, 4 JUMPER SETTINGS	
Position	**Description**
1-2	Dedicated to the JCM WBA (default)
2-3	2-3: Normal RS-232C level (MARS)

JP5 and JP6:

Selects the sound mixer board. The sound mixer board is optional. Use connectors CNI03 and CNI04 to connect it to the IOAB-2. Both the jumper sockets must be the same setting.

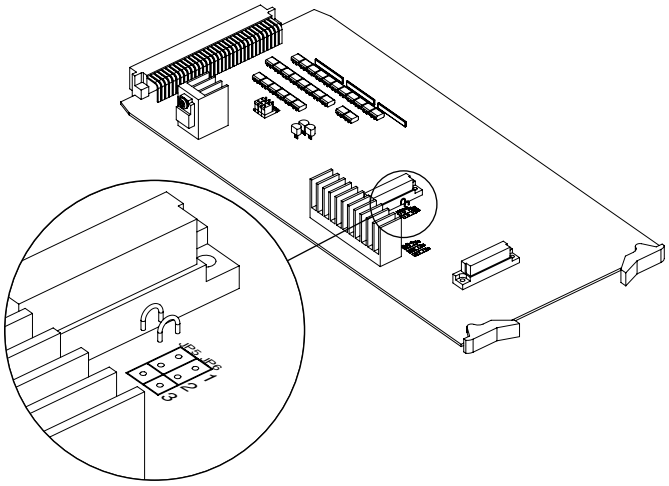

JP5, 6 JUMPER SETTINGS	
Position	**Description**
1-2	Not used (default)
2-3	Used

JP7, JP8 and JP9:

Selects the sound effect IC (YSS915).

The sound effect IC is optional. All the jumper sockets must be the same setting.

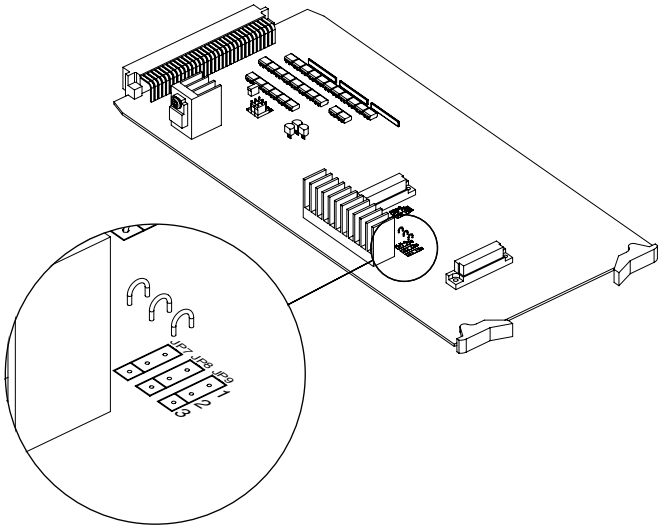

JP7, 8, 9 JUMPER SETTINGS	
Position	**Description**
1-2	Not used (default)
2-3	Used

I/O Drive B Board (IOBB-2)

JP1

The following shows the jumper connections between 1 and 2, and 2 and 3 for the JP1.

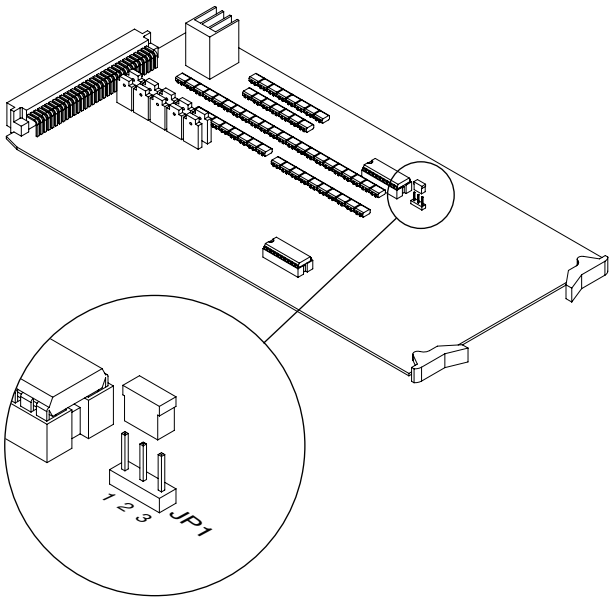

JP1 JUMPER SETTINGS	
Position	**Description**
1-2	0: Brake On.
1-2	1: Brake Off
2-3	0: Brake Off
2-3	1: Brake On

LS240 (IC socket):

Changing these two ICs to LS244 reverses the polarity of the communication port to the SDS unit from negative logic to positive logic.

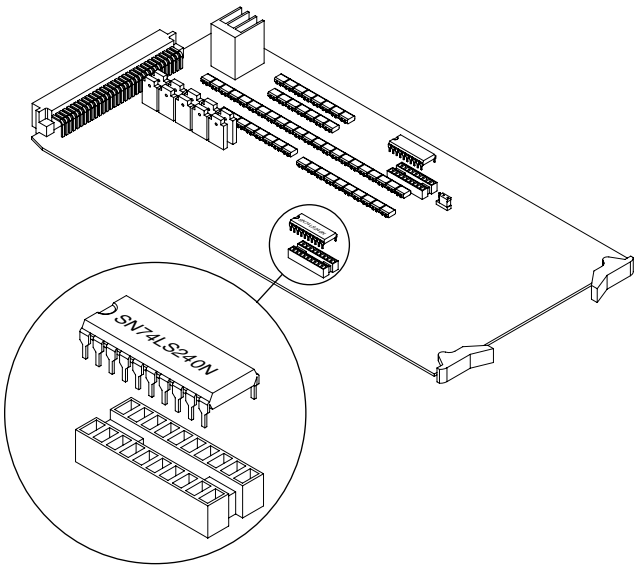

LS240 IC SETTINGS	
IC	**Description**
LS240	Negative Logic (Default).
LS244	Positive Logic

© 2004 KONAMI GAMING

THIS PAGE INTENTIONALLY LEFT BLANK

© 2004 KONAMI GAMING

Module 3

Parts, Assemblies & Hardware

3

Overview

This module describes part removal and installation and includes an illustrated parts manual. This manual is intended for experienced maintenance personnel working on gaming machines.

- **Removal**
  Describes how to remove components from the cabinet. Note that you may need special tools depending on the type of component removed.
- **Disassembly**
  Describes how to disassemble the components. Disassemble the component removed from the cabinet into parts on which maintenance can be performed.
- **Assembly**
  Describes how to assemble the parts. Use caution when reconnecting harnesses to ensure proper operation. Incorrect assembly may cause malfunctions or failures.
- **Installation**
  Describes how to install the components in the cabinet.

CAUTION: Konami Gaming Inc. cannot be held liable for damages or injuries caused by improper or unsupervised installation, modification, or use of equipment not manufactured or approved by Konami Gaming Inc. This equipment is designed as a gaming device for amusement only, for sale and use in jurisdictions permitting such devices. Distributors, Operators, and Users are not to modify the equipment for any other use. Konami Gaming Inc. cannot be held liable for damages or injuries resulting from use or modification of this equipment.

CAUTION: PCB's may contain a lithium battery. Danger of explosion if the battery is incorrectly replaced. Replace only with the same, or equivalent type recommended by the manufacturer.

WARNING: Power to the machine must be turned off prior to cleaning the inside of the machine or removing any mechanical or electrical assembly. Unplug the machine.

WARNING: Hazardous high voltage exists within the cabinet even with machine power off and the power cord unplugged! Use extreme caution when removing electrical assemblies to avoid injury. Discharge body static **BEFORE** touching PCBs to avoid damaging electrostatic sensitive components. Only qualified personnel should attempt servicing this machine.

Required Tools

Phillips Screwdriver (No. 1 And No. 2)
Small Phillips Screwdrivers (No. 0 And No. 1)
4 To 13mm Nut Driver Set Or Ratchet Set
4 To 13mm Wrench Set
3/16" To 7/8" Nut Driver Set Or Ratchet Set
3/16" To 7/8" Wrench Set
22 To 24mm Double-end Wrench
Hand Riveter
Needle-Nose Pliers
Pliers
Voltage and Amperage Tester
Crimping Tool For Connectors
Plastic Ties
Wire Stripper
Pin Extractor
Mounting Tool For Play Buttons (Star Point)
IC Extractor
Wire Cutters

 © 2004 KONAMI GAMING

Commonly-Used Hardware

The following table shows the hardware that this electronic gaming machine uses. Using incorrect hardware may damage the equipment.

Hardware Employed:

COMMONLY USED HARDWARE	
Part Number	**Description**
450002	PIN, SPRING, .125 DIA X .375 LONG
450014	NUT, HEX KEP, 4-40
450015	NUT, HEX KEP, 6-32
450016	NUT, HEX KEP, 8-32
450049	SCREW, FLAT HEAD, 6-32X1/4
450086	SCREW, PAN HEAD PHILLIPS, M4X8
450103	SCREW, SEMS, PAN HEAD PHILLIPS, 10-32X1/2
450107	SCREW, SEMS, PAN HEAD PHILLIPS, 4-40X1/4
450108	SCREW, SEMS, PAN HEAD PHILLIPS, 4-40X3/8
450109	SCREW, SEMS, PAN HEAD PHILLIPS, 6-32X1/2
450110	SCREW, SEMS, PAN HEAD PHILLIPS, 6-32X1/4
450112	SCREW, SEMS, PAN HEAD PHILLIPS, 6-32X3/8
450115	SCREW, SEMS, PAN HEAD PHILLIPS, 8-32X1/4
450117	SCREW, SEMS, PAN HEAD PHILLIPS, 8-32X3/8
450120	SCREW, SEMS, PAN HEAD PHILLIPS, M3X4
450121	SCREW, SEMS, PAN HEAD PHILLIPS, M3X5
450123	SCREW, SEMS, PAN HEAD PHILLIPS, M3X8
450125	SCREW, SEMS, PAN HEAD PHILLIPS, M4X4
450128	SCREW, SEMS, PAN HEAD PHILLIPS, M4X8
450144	NUT, NYLOK, 2-56
450146	GUIDE, PCB, 6IN, HSG, CPU
450152	SCREW, PAN HEAD PHILLIPS, M2X10
450160	SPRING, EXTENSION, .25DIA X 1LONG
450161	SCREW, CONNECTOR MOUNTING
450163	RIVET,POP,1/8"DIA X 3/8" LONG
450164	E-RING,3MM SHAFT SIZE X .5MM GROOVE
450165	SPRING, SOLENOID
450166	E-RING,.343ID X .039 GROOVE
450176	WASHER, #8 FLAT
450182	SCREW, WOOD,PHILLIPS HEAD,#8 X 5/8
450183	SPACER, #6, .25 DIA x .25 LONG, NYLON
540191	SCREW, PAN HEAD PHILLIPS, 2-56 X 1/2
450222	SCREW, FLAT HEAD, M3X8
450282	NUT, HEX, NYLOCK, 8-32
450285	WASHER, FENDER, #10 OD 1"X7/32 ID X 3/64
450356	STAY DOOR, 9.5"
450367	SPRING CLIP
450389	TAG, SECURITY
450391	NYLON,SPACER,d .140, D .250, L .220
450392	SCREW,SEMS,PAN HEAD PHILLIPS, 8-32-7/8
450393	SCREW,SEMS,PAN HEAD PHILLIPS,8-32-7/16
450394	SCREW,SEMS,PAN HEAD PHILLIPS,8-32-3/16
450395	SPRING,MAIN DOOR,LATCH,K2V

Functional Overview

This chapter describes names and functions of the main parts. Use the illustrations below to identify the major components.

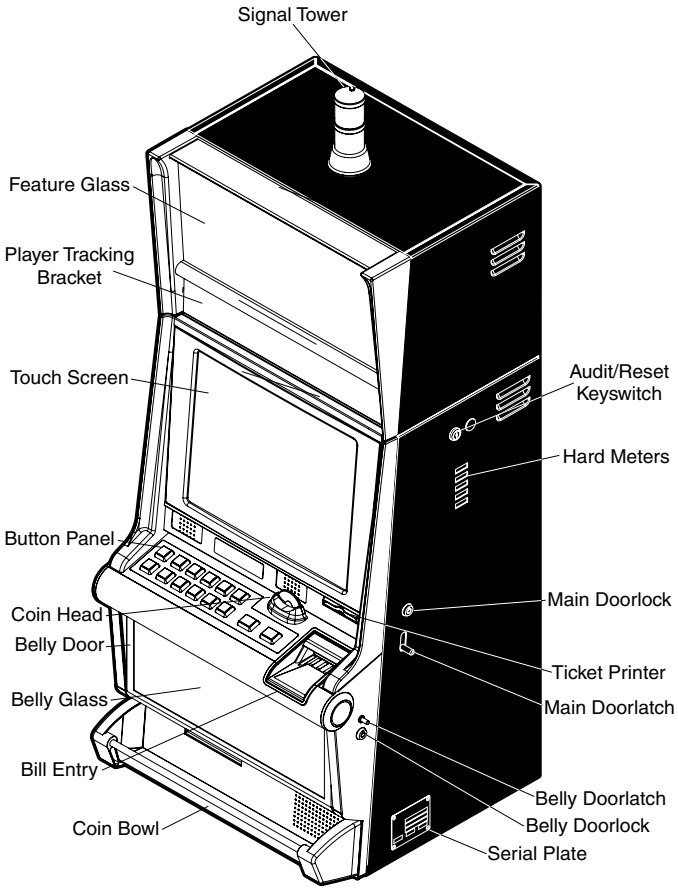

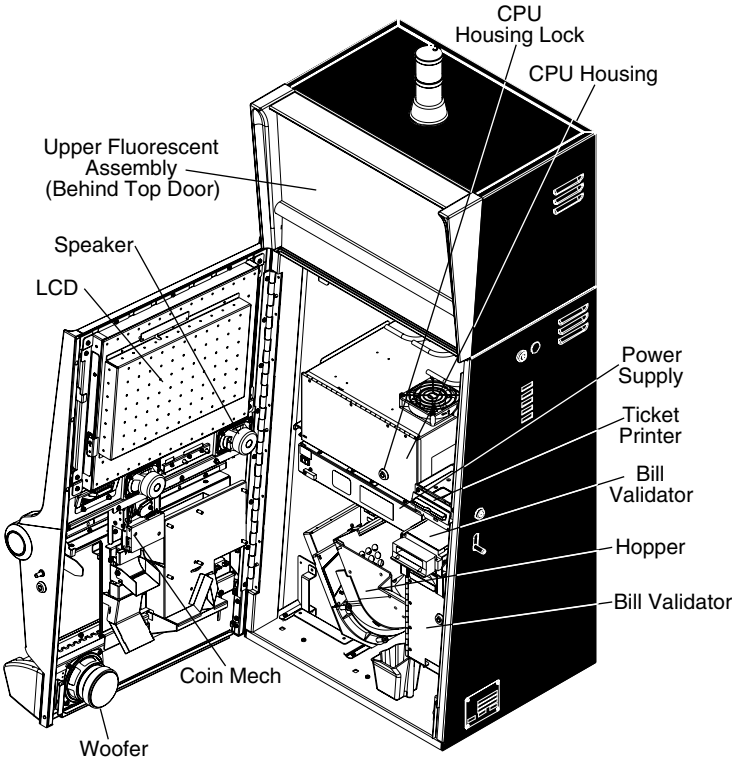

Parts Removal

Describes how to remove components from the cabinet. Note that special tools may be needed depending on the type of component being removed.

Main Door Switch

Removal

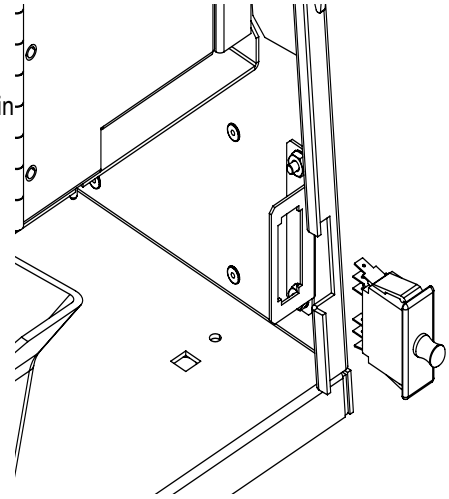

Open the main door. Remove all wires from the back of the switch. Note wire locations for future reference during installation. Gently grasp the main door switch from the top and bottom behind the mounting bracket and push the switch forward.

Installation

Insert the switch from the front of the machine. Gently push the switch into the bracket until it seats. Connect the wires to the terminals. Close and lock the main door.

Topbox Door Switch

Removal

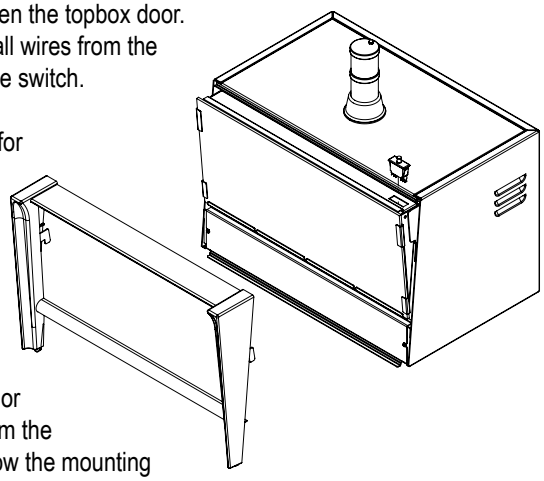

Open the topbox door. Remove all wires from the back of the switch. Note wire locations for future reference during installa-tion. Gently grasp the topbox door switch from the sides below the mounting bracket and push the switch up.

Installation

Insert the switch from the top of the machine. Gently push the switch into the bracket until it seats. Connect the wires to the terminals. Install the topbox door. Close and lock the main door.

Belly Door Switch

Removal

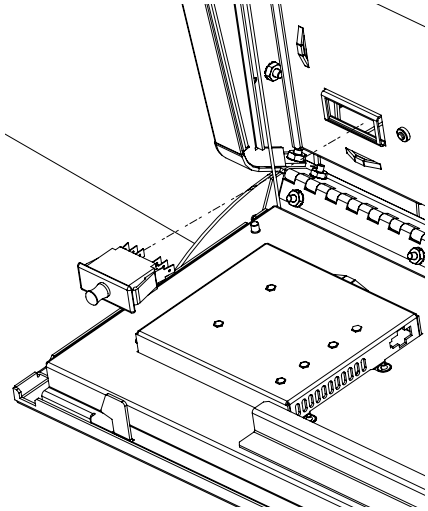

Open the belly door. Remove all wires from the back of the switch. Note wire locations for future reference during installation. Gently grasp the belly door switch from the sides behind the mounting bracket and push the switch forward.

Installation

Insert the switch from the front of the machine. Gently push the switch into the bracket until it seats. Connect the wires to the terminals. Close and lock the belly door. Close the main door.

Switch Wiring

Each wire of the switch harnesses is marked to indicate terminal position. Use this illustration to ensure the switch is connected correctly.

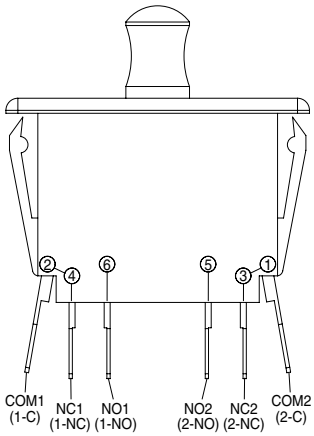

DOOR SWITCH WIRE LOCATIONS	
Location	**Color Code**
Terminal 1	White Stripe on Black
Terminal 5	White Stripe on Blue
Terminal 4	Blue
Terminal 2	Brown Stripe on Black

 © 2004 KONAMI GAMING

Hopper

Removal

Open the main door. Grasp the hopper by the handle and slide forward.

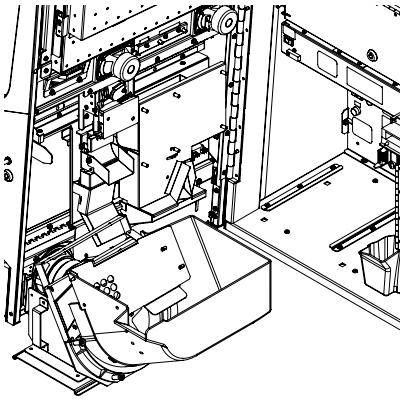

Installation

Align the hopper into the two hopper guides. Firmly insert the hopper making sure the hopper plug is fully connected to the power control panel connector.

Power Supply

Removal

Open the main door. Unscrew the power supply mounting panel fastener. Slide the power supply assembly forward until it clears the mounting rails.

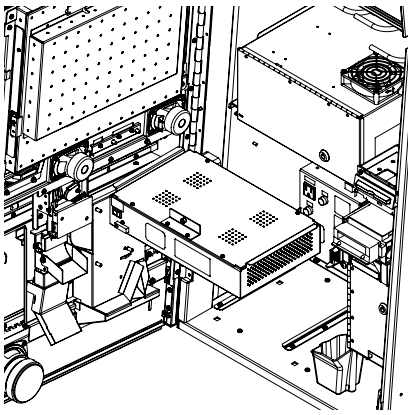

Installation

Slide the power supply into the mounting rails and push back until the power supply connector is securely seated. Tighten the power supply mounting panel fastener.

Bill Validator

Removal

Open the main door. Open the bill cassette door. Remove the cash cassette box by depressing the cash box latch and sliding the box forward. Remove the three M4 X 4 screws from the left side of the enclosure. Remove the four 6-32 X 1/4 screws from the back of the bill validator. Remove the bill validator.

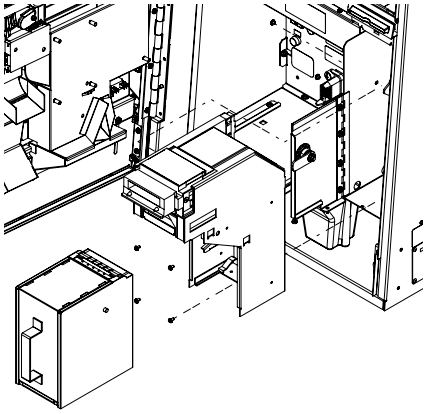

Installation

Install the bill validator. Insert the four 6-32 X 1/4 screws into the back of the bill validator. Insert the three M4 X 4 screws into the left side of the enclosure. Install the cash cassette box by depressing the cash box latch and sliding the box to the back of the bill validator housing. Close and lock the bill cassette door. Close and lock the main door.

Logic Unit

Removal

Turn off machine power. Open the main door. Open the logic unit door. Unplug all connectors from the logic unit. Remove the two 6-32 screws. Remove the logic unit

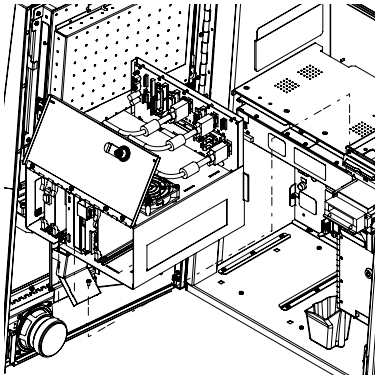

Installation

Install logic unit. Install the two 6-32 screws. Connect all harnesses. Close and lock the logic unit door. Turn on main power. Close and lock the main door.

I/O Drive B Board (IOBB-2)

Removal

Turn off machine power. Open the topbox door. Open the logic unit door. Pull the two locking clips forward and pull the I/O drive B board out until it clears the mounting guides.

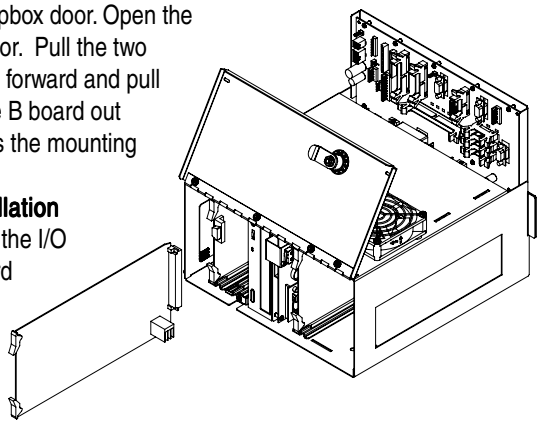

Installation

Slide the I/O drive B board into the mounting guides. Slide back until the edge connector seats. Secure the locking clips. Lock the logic unit door. Lock the main door. Turn on main power.

I/O DriveA Board (IOAB-2)

Removal

Turn off machine power. Open the topbox door. Open the logic unit door. Pull the two locking clips forward and pull the I/O drive B board out until it clears the mounting guides.

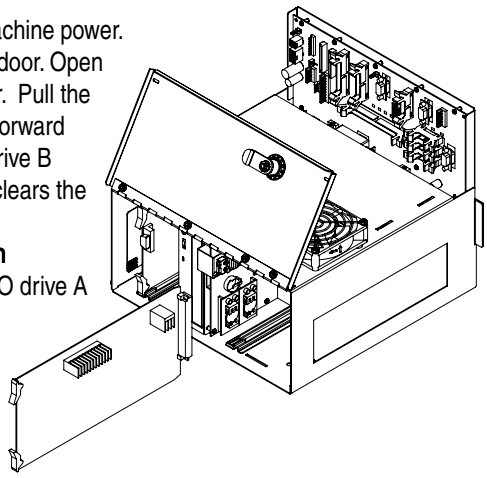

Installation

Slide the I/O drive A board into the mounting guides. Slide back until the edge connector seats. Secure the

 © 2004 KONAMI GAMING

locking clips. Lock the logic unit door. Lock the main door. Turn on main power.

CD/Logic Unit

Removal

Turn off machine power. Open the main door. Open the logic unit door. Unplug all connectors from the CD/logic unit. Remove the two 6-32 screws from the CD ROM housing. Remove the housing.

Installation

Slide the CD ROM housing into position. Slide back until the mounting tabs are aligned. Install the two 6-32 screws. Connect all harnesses to the CD/logic unit. Lock the logic unit door. Lock the main door. Turn on main power.

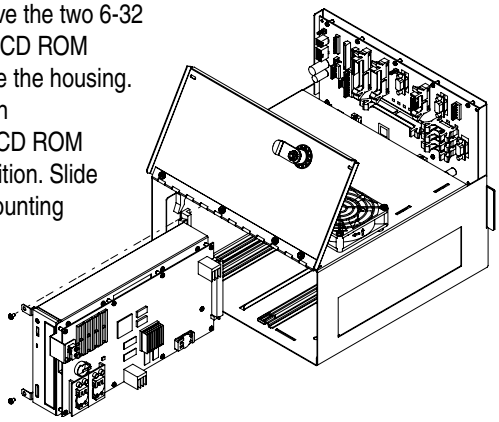

Main Control Board (MCTB)

Removal

Place the CD/logic unit on a clean, stable surface. Remove the nine M3 screws from the unit. Remove the board.

Installation

Place the board on the CD/logic unit. Install the nine M3 screws.

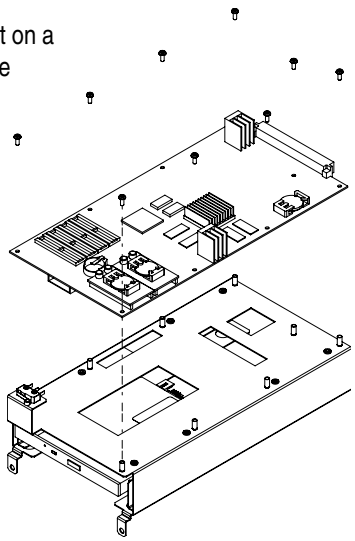

Communication Board (COMB-2)

Removal

Turn off machine power. Open the main door. Open the logic unit door. Pull the two locking clips forward and pull the communication board out until it clears the mounting guides.

Installation

Slide the communication board into the mounting guides. Slide back until the edge connector seats. Secure the locking clips. Lock the logic unit door. Lock the main door. Turn on main power.

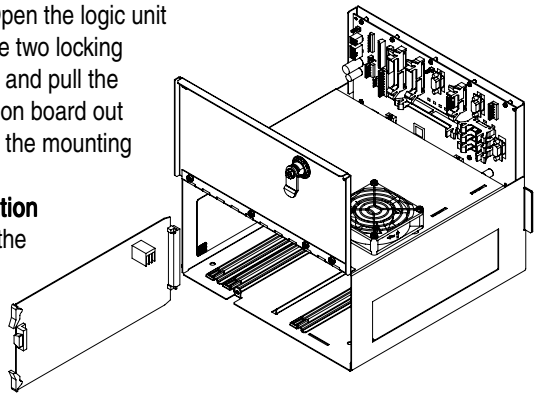

Logic Unit Switch

Removal

Disconnect the harness from the switch. Remove the two 2-56 X 1/2 screws from the switch. Remove the switch.

Installation

Place the switch on the mounting bracket. Install the two 2-56 x 1/2 screws. Connect the harness.

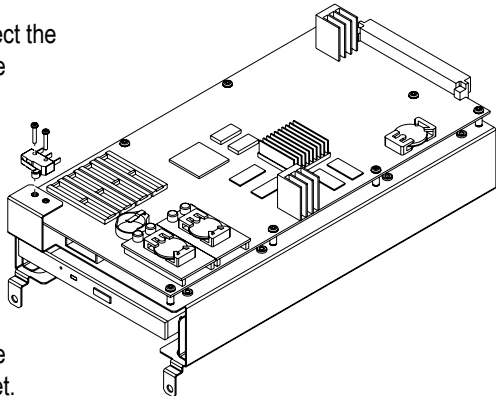

Backplane Board (BCKB-3)

Removal

Turn off machine power. Open the main door. Open the logic unit door. Remove the I/O Drive A board, the I/O Drive B board, the CD/logic assembly, and the Comb board. Disconnect all harness from the backplane board. Remove the CD/Logic assembly from the top box. Remove the fifteen 4-40 screws from the backplane board. Remove the backplane board.

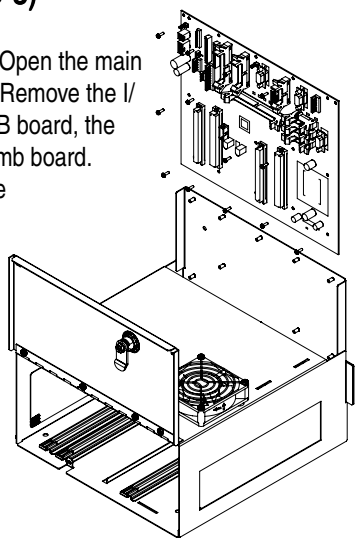

Installation

Place the backplane board in position. Install the fifteen 4-40 screws in the backplane board. Install the CD/Logic assembly. Install the harnesses. Install the I/O Drive A board, the I/O Drive B board, the CD/logic assembly, and the Comb board. Lock the logic unit door. Lock the main door. Turn on main power.

Key Switch

Removal

Turn off machine power. Open the main door. Disconnect the wires on the back of the switches. Remove the 3/4" nut.

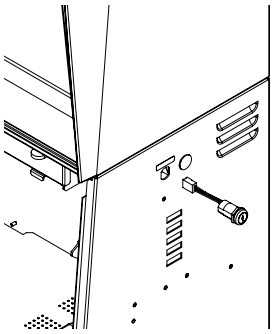

Installation

Insert the switch. Install the 3/4" nut. Connect the wires to the terminals. Turn on main power. Lock the main door.

Printer Assembly

Removal

Turn off machine power. Open the main door. Disconnect the harnesses from the printer assembly. Remove the four 6-32 screws. Remove the printer.

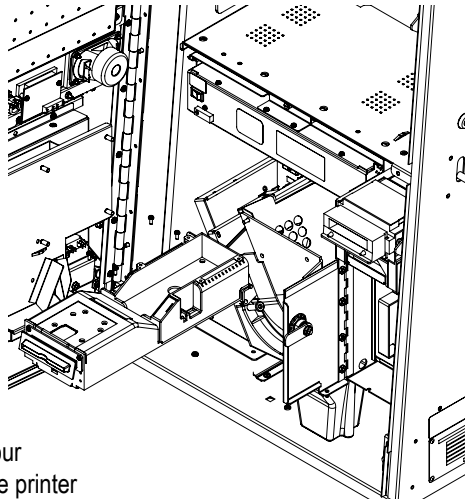

Installation

Install the printer. Install the four screws. Connect the printer harness. Turn on main power. Close the main door.

Feature Glass

Removal

Open the main door. Remove the top box door by lifting it up and back. Remove the feature glass by sliding it up and out of the mounting brackets.

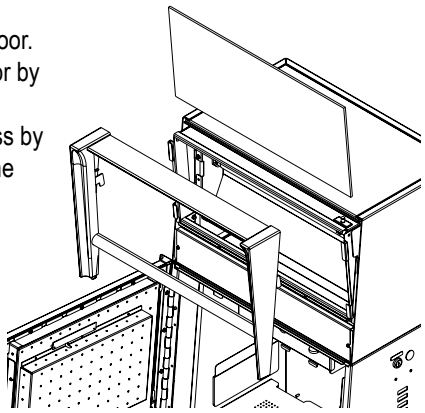

Installation

Install the feature glass. Install the topbox door. Turn on main power. Close the main door.

Belly Glass

Removal

Open the main door. Turn off machine power. Open the belly door. Disconnect the harnesses from the belly light assembly. Loosen, but do not remove the two 6-32 nuts. Remove the belly light assembly. Remove the belly artwork. Remove the belly glass

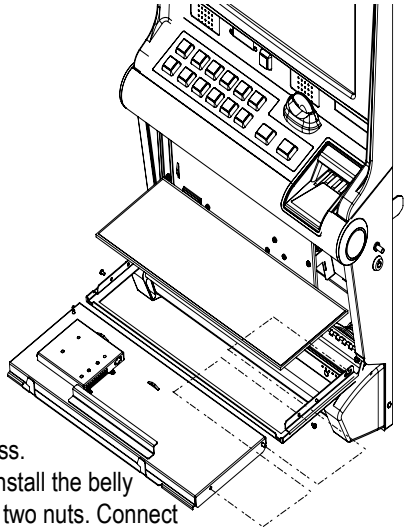

Installation

Install the belly glass. Install the belly artwork. Install the belly light assembly. Install the two nuts. Connect the harnesses to the belly light assembly. Close the belly door. Turn on machine power. Close the main door.

Power Control Assembly

Removal

Open the main door. Turn off machine power. Remove the hopper. Disconnect the harnesses from the control panel assembly. Remove the three 8-32 nuts. Remove the two 8-32 screws. Remove control panel assembly.

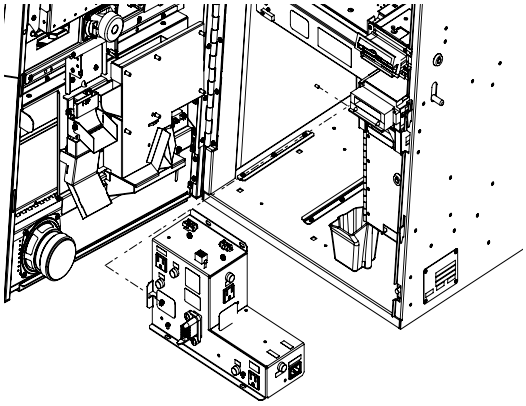

Installation

Install the control panel assembly. Install the two 8-32 screws. Install the three 8-32 nuts. Connect the harnesses to the control panel assembly. Install the hopper. Turn on machine power. Close the main door.

Bill Validator Door Switch Assembly

Removal

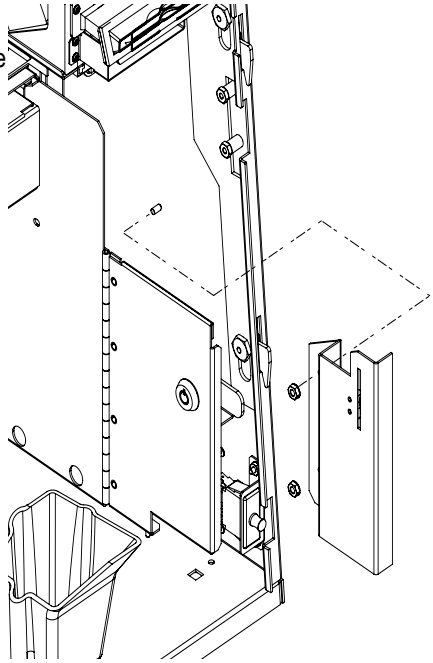

Open the main door. Turn off machine power. Remove the hopper. Remove the bill validator. Disconnect the harness from the bill validator door switch assembly. Remove the two 8-32 nuts. Remove the bill validator door switch assembly.

Installation

Install bill validator door switch assembly. Install the two 8-32 nuts. Connect the harnesses to the bill validator door switch assembly. Install the bill validator. Install the hopper. Turn on machine power. Close the main door.

Door Lock Sensor

Removal

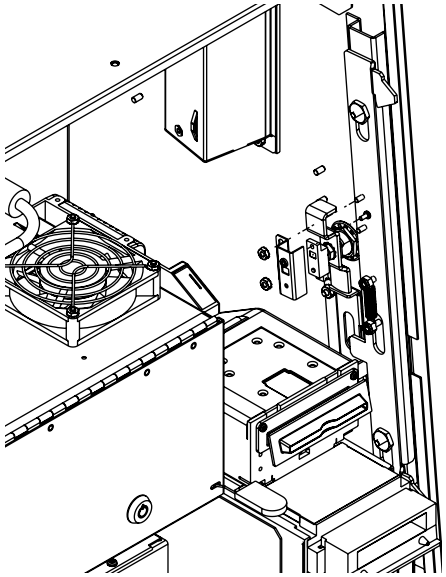

Open the main door. Turn off machine power. Disconnect the harness from the optic sensor. Remove the 6-32 nut from the door lock sensormounting bracket. Remove the 4-40 X 1/4 screw from the sensor. Remove the optic sensor.

Installation

Align the hole in the optic sensor to the mounting bracket. Install the 4-40 screw. Connect the harness to the optic sensor. Turn on machine power. Close the main door. Use the same procedure to remove and install the door side optic sensor.

LCD Unit

Removal

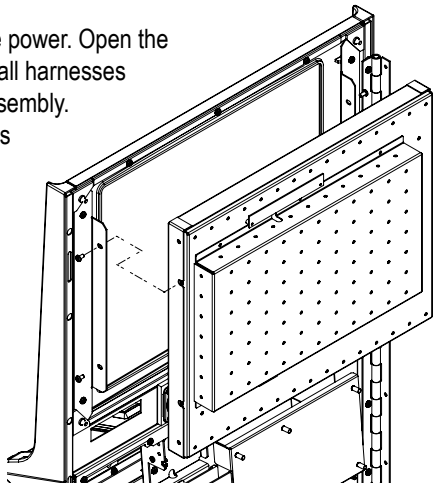

Turn off machine power. Open the main door. Disconnect all harnesses connecting the LCD assembly. Remove the four screws securing the LCD. Remove the LCD.

Installation

Align the LCD to the four mounting holes. Install the four screws. Connect the harnesses to the LCD. Turn on main power. Lock the main door.

Speakers

Removal

Turn off machine power. Open the main door. Remove the wires from the speakers. Remove the four 6-32 nuts from the speakers. Remove the speakers. Remove the wood speaker plates.

Installation

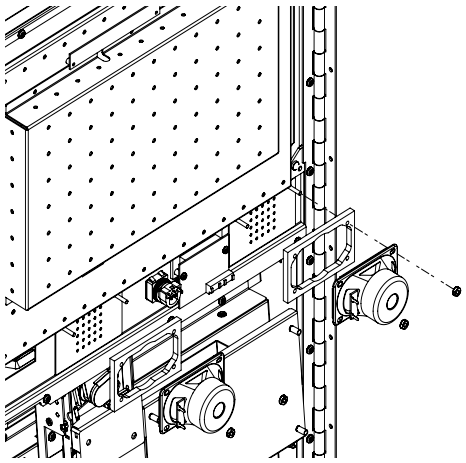

Slide the wood speaker plates on to the mounting studs. Slide the speakers on to the mounting studs. Tighten the four nuts. Connect the speaker wires. Turn on main power. Lock the main door.

Meter Unit

Removal

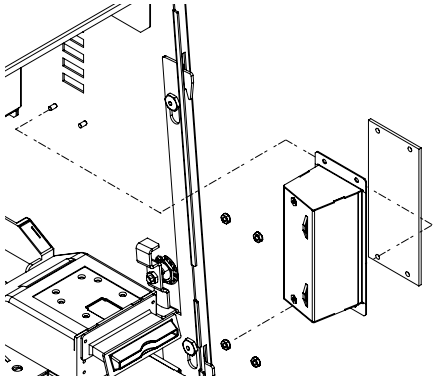

Open the main door. Turn off machine power. Disconnect the meter harness. Remove the four 8-32 nuts from the meter unit. Remove the meter unit. Remove the acrylic meter cover.

Installation

Install the acrylic meter cover. Install the meter unit. Install the four 8-32 nuts on the meter unit. Connect the meter harness. Turn on main power. Lock the main door.

 © 2004 KONAMI GAMING

HARNESSES INSTALLED	
Part Number	**Description**
110046	HRNS,DOOR F.G.
110050	HRNS,HOPPER
110053	HRNS,BILL VALIDATOR (JCM)
110055	HRNS,BILL STACKER SWITCH 1 (JCM)
110056	HRNS,BILL STACKER SWITCH 2 (JCM)
110231	HRNS,AC INLET,NSR
110234	HRNS,AC INSIDE
110301	HRNS,FL BALLAST
110302	HRNS,FL TUBE SOCKET
110305	HRNS,KS,POWER SUPPLY
110306	HRNS,KS,CABINET,AC/DC
110307	HRNS,KS,CABINET,SWITCH
110309	HRNS,KS,PRINTER,SEIKO
110312	HRNS,KS,BILL VALIDATOR,MARS
110314	HRNS,KS,PLAY BUTTON,5REEL
110315	HRNS,KS,COIN TRACK
110323	HRNS,AS,BALLAST,R-TOP
110324	HRNS,KS,DROP DOOR SWITCH (OPTIONAL)

Parts Manual

Main Machine Assembly 97
Main Cabinet 1 Assembly 98
Main Cabinet 2 Assembly 99
Main Door 1 Assembly 100
Main Door 2 Assembly 101
Main Topbox (Casino) Box Assembly 102
330334 Main Topbox (Casino) Door Assembly 102
Main Topbox (Extended) Box Assembly 102
330335 Main Topbox (Extended) Door Assembly 102
Main Topbox (Round) Box Assembly 103
330336 Main Topbox (Round) Door Assembly 103
330095 Bill Validator Housing Assembly 103
330099 BV Door Switch Assembly 103
330094 Power Control Panel Assembly 104
330297 CPU Housing Assembly 104
330303 Power Supply Assembly 105
330003 Hard Meter Assembly 105
330300 Coin Bowl Assembly 105
330173 Bolster Assembly 106
330304 Coin Handling Assembly 106
330302 Belly Door Assembly 106
330035 Seiko Printer Assembly 106
330058 Ithaca 850 Printer Assembly 106
330039 Ithaca 860 Printer Assembly 106
330305 Printer,Seiko,Gen 2 Assembly 107
330301 Coin Panel Assembly 107
330111 Top Box Fluorescent Assembly 107
330344 Assy,Pnl, Light Reflt. Ext. Top Box 107
330152 Fluorescent Lt. Assembly Round Top Box 107
330012 Ballast & Starter Assembly 108
330299 Button Panel (Multi-Line) Assembly 108
530218 19” LCD Assembly 108
310001 Bill Validator Assembly (JCM WBA 13) 108
310010 Bill Validator Assembly (JCM WBA 12SS) 108
310027 Bill Validator Assembly (Mars ZT-1207) 108
310092 Bill Validator Assy (MARS,SC66XX,Cashflow) 108
Hopper Assembly 109
330367 Bill Entry Assembly 109
330368 Bill Entry Assembly (69MM) 109
630004 Signal Tower, Two Tier, Chrome (Tall) 109
630007 Signal Tower, Two Tier, Chrome (Short) 109
630016 Signal Tower, Two Tier, Gold (Short) 109
630015 Signal Tower, Two Tier, Gold (Tall) 109
630025 Signal Tower,3 Tier,Short,Chrome 109
630026 Signal Tower,3 Tier,Short,Gold 109
330001 CD/Logic Assembly 110
330103 CD/Logic Assembly (Low Profile) 110
330171 CD Assembly (Low Profile) 110
330296 Door Sensor Assembly (Cabinet) 110
330295 Door Sensor Assembly (Door) 110

Main Machine Assembly

Item	Part #	Description
1.	450117	Screw, Sems, Pan Head Phillips, 8-32X3/8 (9)
2.	450103	Screw, Sems, Pan Head Phillips, 10-32X1/2 (8)
3.	630004	Twr,Two-tier,Tall
	630007	Twr,Two Tier,Short
	630015	Twr,Two Tier,Tl,Gold
	630016	Twr,Two Tier,Sh,Gold
	630025	Candle,3 Tier,Short,Chrome
	630026	Candle,3 Tier,Short,Gold
4.	450356	Stay Door, 9.5"
5.	450015	Nut, Hex Kep, 6-32
6.	N/A	Assy, Cabinet, Main
7.	N/A	Assy, Door, Main
8.	N/A	Assy, Topbox Box
9.	330334	Assy, Topbox Door (Casino)
	330335	Assy, Topbox Door (Extended)
	330336	Assy, Topbox Door (Round)
N/S	110046	Hrns,Door F.G. (2)

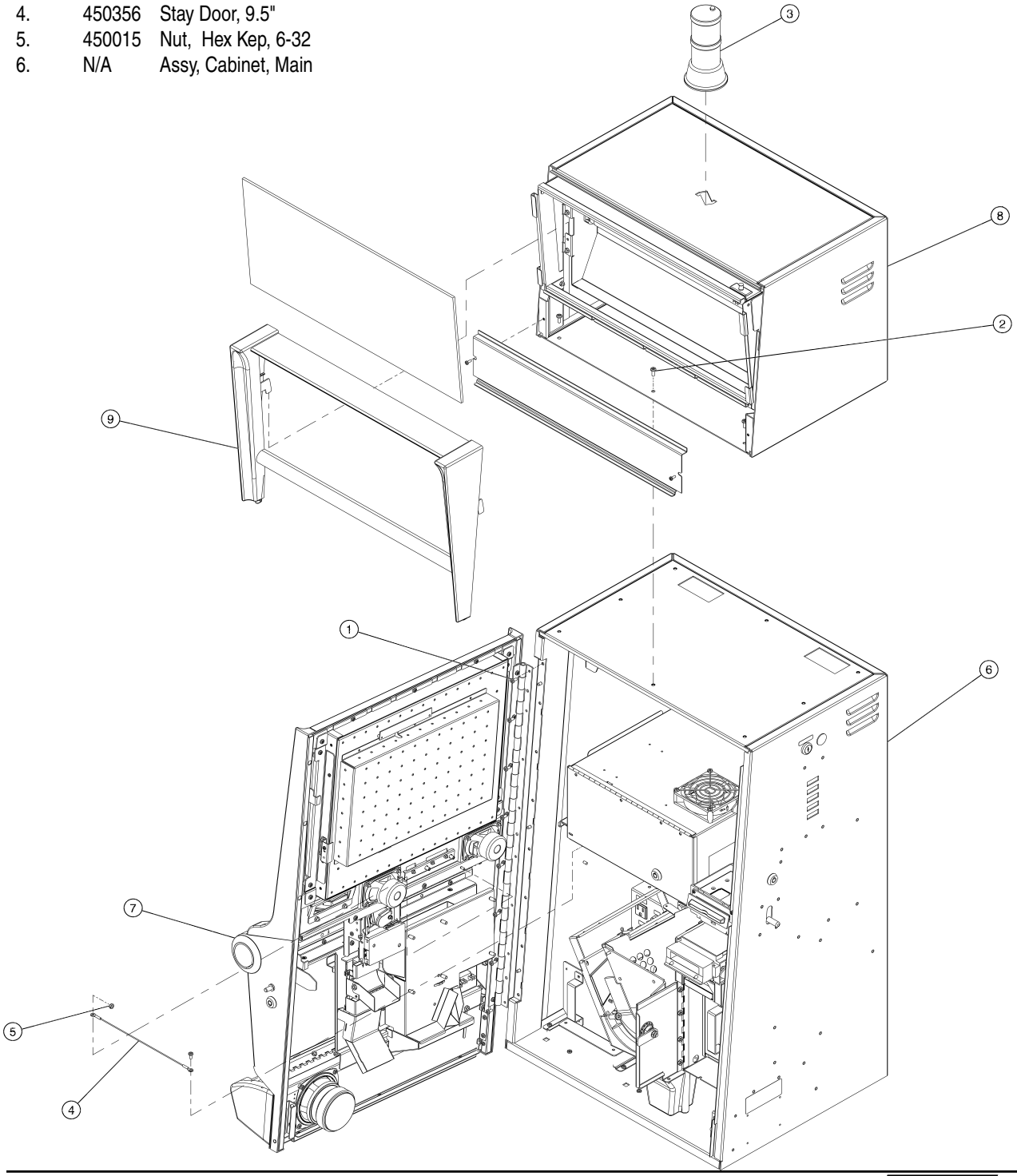

 © 2004 KONAMI GAMING

Main Cabinet 1 Assembly

Item	Part #	Description
1.	130345	Wldmnt, K2v, Cabinet
2.	750006	Base, Cabinet, Wood
3.	450182	Screw, Wood,Phillips Head,#8 X 5/8 (9)
4.	330094	Assembly, Power Control Panel
5.	450115	Screw, Sems, Pan Head Phillips, 8-32X1/4 (12)
6.	450016	Nut, Hex Kep, 8-32 (22)
7.	190026	Guide, Hopper, LF
8.	190027	Guide, Hopper, RT
9.	190828	Bkt,Rtg,Main Door Latch Bar
10.	130338	Door Lift,Bar,Wldmt
11.	190845	Lock Bar,Main Door
12.	230004	Nut, Retaining, Latch Bar (2)
13.	230005	Bushing, Latch, Main Door (2)
14.	230006	Nut, Bushing, Latch, Main Door (2)
15.	330099	Assembly, Switch, Bv Door
16.	330095	Assembly, BV Housing

em	Part #	Description
17.	130258	Shelf, Reel, Weldment
18.	450057	Screw, Flat Head, 8-32X3/8 (2)
19.	330296	Assy,Door Optic,Cabinet,KS
20.	450015	Nut, Hex Kep, 6-32 (4)
21.	190849	Btk,Cherry Switch,Mtg
22.	490044	Switch,Cherry,E79-30A
23.	450395	Spring,Main Door,Latch,K2V
24.	450282	Nut, Hex, Nylock, 8-32 (2)
25.	130343	Plate,Mtg,Power Supply,Weldment
26.	190604	Bkt., Mtg., Connector, Power Supply
27.	450161	Screw, Connector Mounting (2)
28.	330303	Assembly, Power Supply
N/S	110309	Hrns,KS,Printer,Seiko
N/S	110307	Hrns,KS,Cabinet,Switch
N/S	110306	Hrns,KS,Cabinet,AC/DC
N/S	110053	Hrns,Bill Validator,JCM

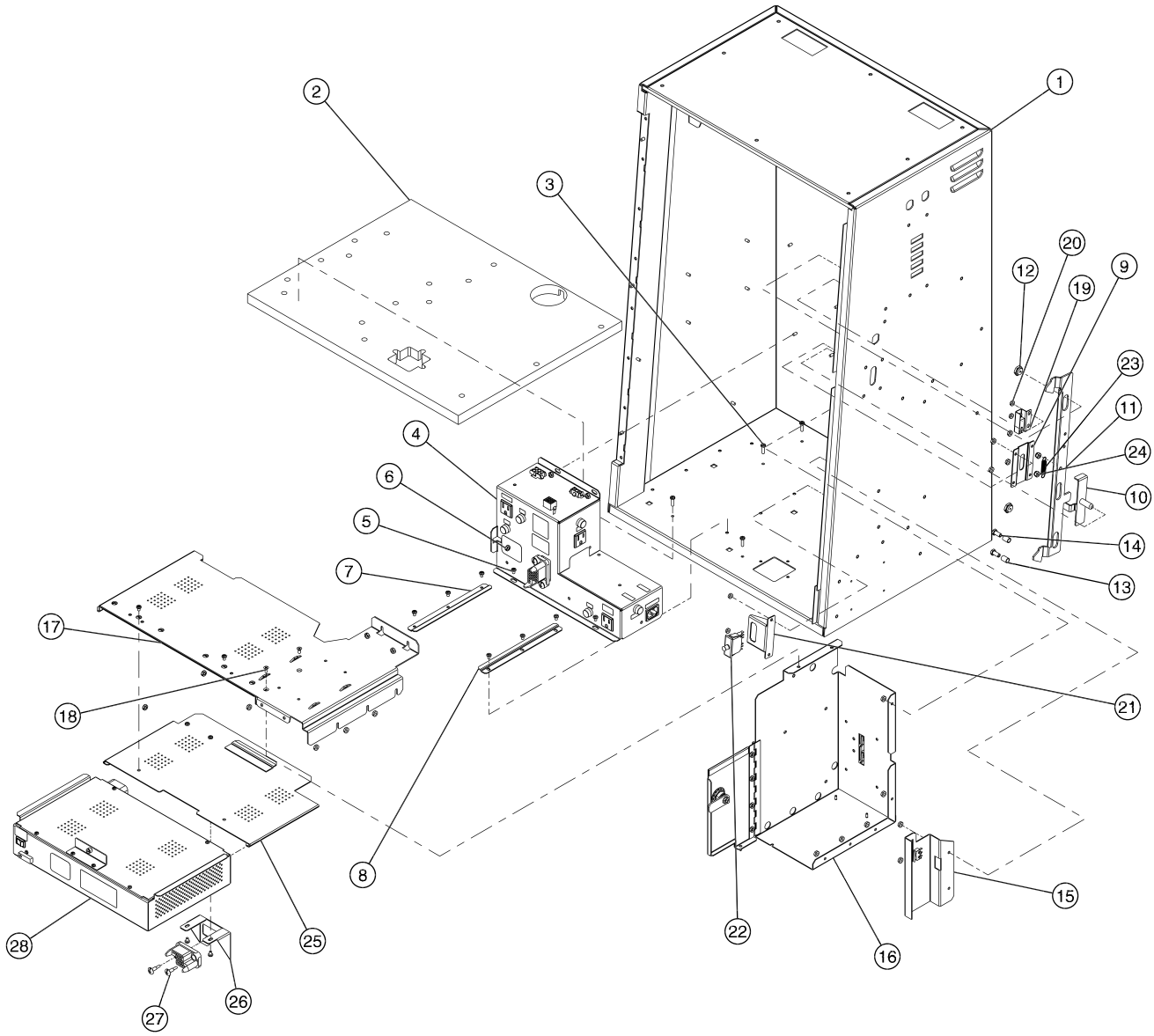

Main Cabinet 2 Assembly

Item	Part #	Description
1.	310001	Validator,Bill,WBA13
	310027	Validator,Bill,MARS ZT-1207
	310092	Validator,Bill,MARS SC66XX,Cashflow
2.	450125	Screw, Sems, Pan Head Phillips, M4 (3)
3.	450110	Screw, Sems, Pan Head Phillips, 6-32X1/4 (4)
4.	410008	Entry,BV,I/F,JCM
	410027	Entry,BV,I/F,MARS
	410038	Entry,BV,I/F,Mars 69mm
	410039	Entry,BV,I/F,JCM 69mm
	410105	Entry, Bill, Cashflow, Multi-width, 1.5,Canadian
	410143	Bezel,Mars SC66 Cashflow,Black,U/R,US
5.	450167	Screw, Pan Head Phillips, M3X12 (2)
6.	410019	Tube, Drop
7.	450112	Screw, Sems, Pan Head Phillips, 6-32X3/8 (7)
8.	710000	Lock,Barrel,.625 Long
9.	190306	Cam, Main Door
10.	310025	Keyswitch, Rotary, Slide, Assembly
11.	130057	Plug,Reset Key
12.	450285	Washer, Fender, #10 Od 1"X7/32 Id X 3/64
13.	450015	Nut, Hex Kep, 6-32
14.	410018	Cover, Meter, Clear
15.	330003	Meter, 5 Unit
16.	450016	Nut, Hex Kep, 8-32 (4)
17.	190012	Plt,Serial Number,CUL
18.	450163	Rivet,Pop,1/8"Dia X 3/8" Long (4)

Item	Part #	Description
19.	310172	Assy,Printer,Seiko,Gen2
	330035	Assy.,Printer,Seiko PSA -66-ST
	330039	Assy.,Printer,Ithaca 860
	330058	Assy.,Printer,Ithaca 850
	330208	Assy.,Printer,JCM
20.	410142	Bezel,Next Gen, A.S.
21.	450121	Screw, Sems, Pan Head Phillips, M3X5 (4)
22.	530214	Pcb, Illumination, Future Logic, N/G
23.	830055	Decal,FCC,Disclaimer
	830136	Decal,FCC,Disclaimer (Clear)
24.	830079	Decal,Reset,Audit
	830135	Decal,Reset,Audit (Clear)
25.	310021	Hopper, Low Profile, 25¢
	310019	Hopper, Low Profile, 5¢
	310020	Hopper, Low Profile, $1
	310084	Hopper,Low Profile, 50¢
	310089	Hopper,Asahi Seiko,L.P.,Side Eject,25¢
	310090	Hopper,Asahi Seiko,L.P.,Side Eject,5¢
	310091	Hopper,Asahi Seiko,L.P.,Side Eject,$1
26.	410035	Holder, Error Code, 7.5 X 3.0 6 Mil, Plstc
27.	810007	Card, Error Code, Video
28.	330297	Assy,CPU,New
29.	450117	Screw, Sems, Pan Head Phillips, 8-32X3/8 (2)
N/S	490078	Cord,AC

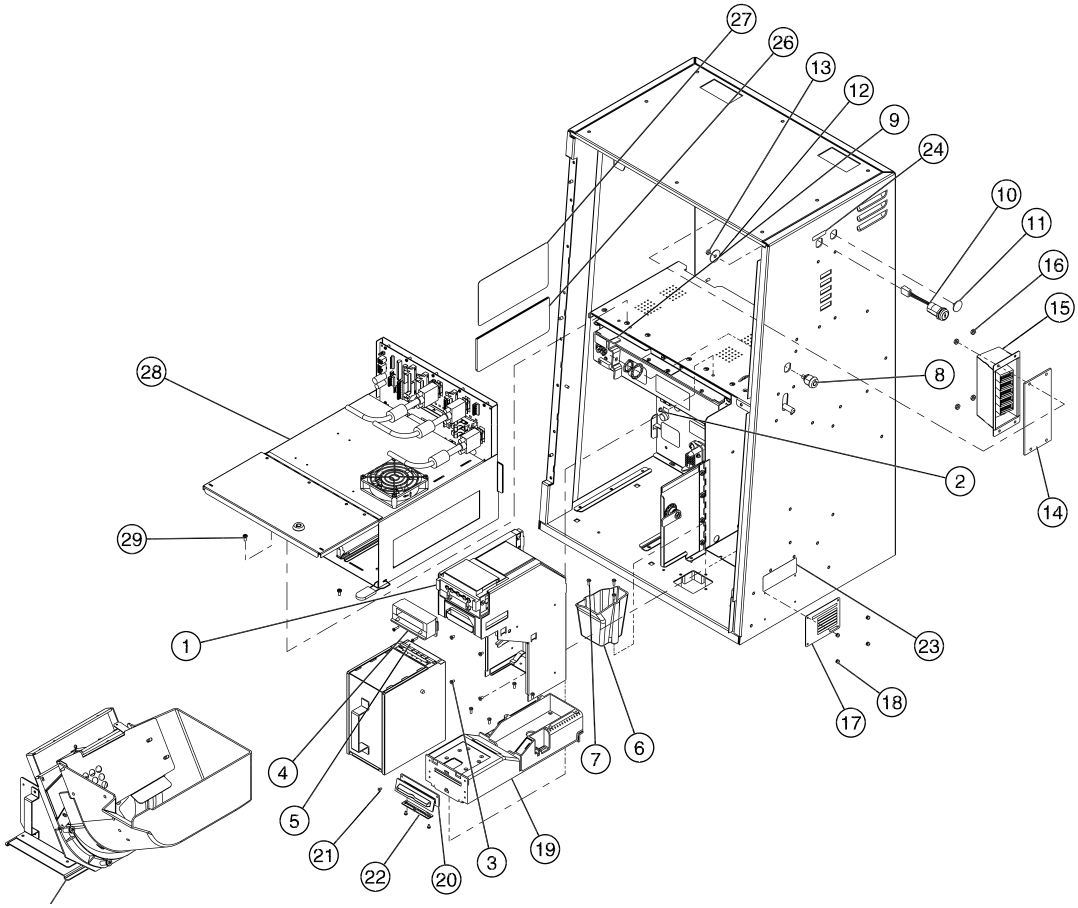

Main Door 1 Assembly

Item	Part #	Description
1.	130344	Weldment, Frame, Main Door
2.	190829	Crossmember, Mtg., Coin Bowl
3.	190841	Pnl,Side,Main Door,LF
4.	450112	Screw, Sems, Pan Head Phillips, 6-32X3/8 (4)
5.	450016	Nut, Hex Kep, 8-32 (23)
6.	190842	Pnl,Side,Main,Door,RT
7.	330173	Assy, Bolster, Main Door
8.	450115	Screw, Sems, Pan Head Phillips, 8-32X1/4 (4)
9.	190843	Panel,Deck,Main Door
10.	330299	Assy, Button Panel, Multi Line
11.	450117	Screw, Sems, Pan Head Phillips, 8-32X3/8 (11)
12.	330300	Assy, Coin Tray
13.	190827	Bkt, Cherry Switch, Act.
14.	330302	Assy, Belly Door, New
15.	450015	Nut, Hex Kep, 6-32 (8)
16.	190826	Bkt,Mtg,LCD,Main Door (2)
17.	410139	Bezel,LCD,Venture Series
18.	530218	LCD 19"
19.	450123	Screw, Sems, Pan Head Phillips, M3X8 (4)
20.	330295	Assy,Door Optic,Door,KS

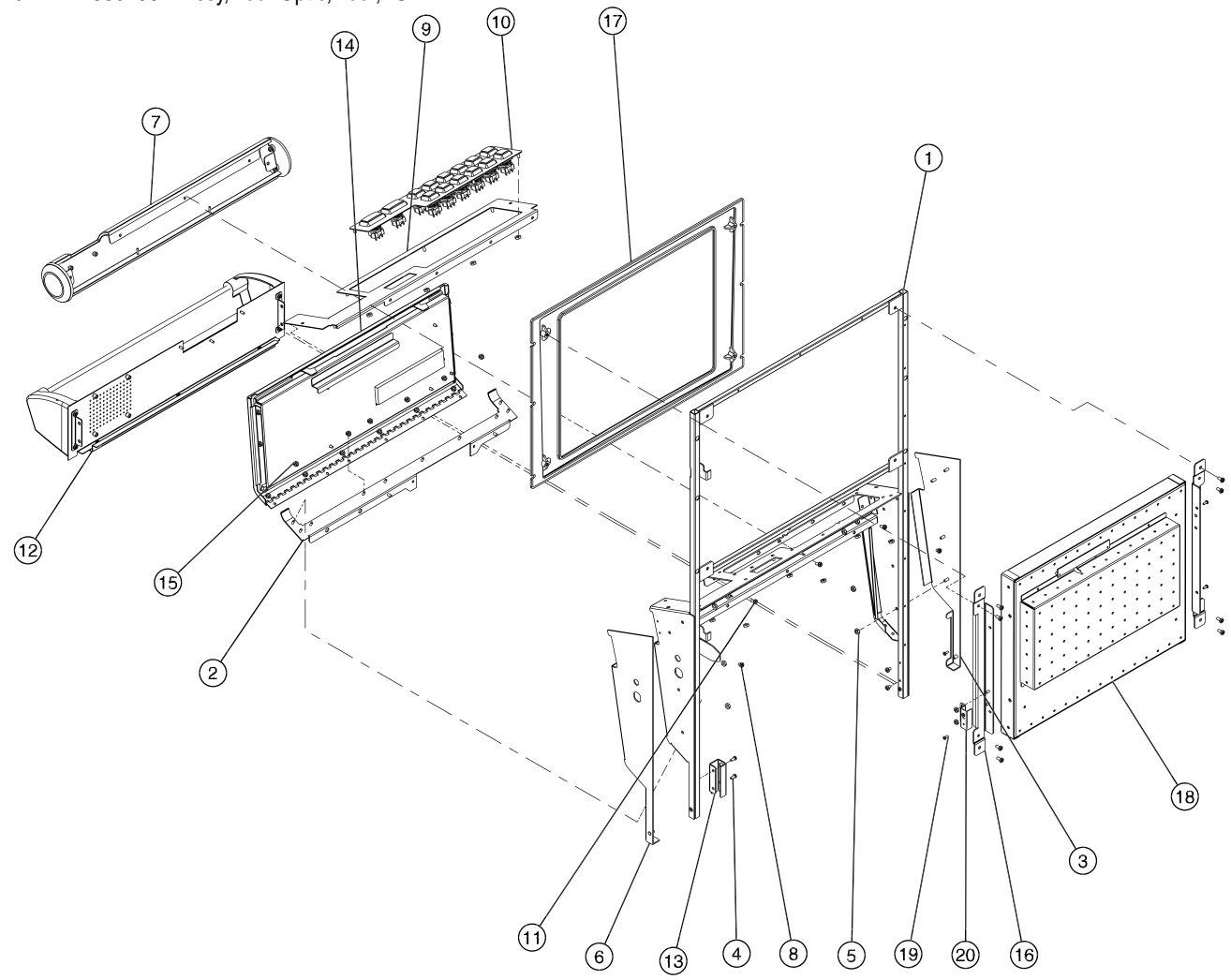

 © 2004 KONAMI GAMING

Main Door 2 Assembly

Item	Part #	Description
1.	450117	Screw, Sems, Pan Head Phillips, 8-32X3/8 (32)
2.	450015	Nut, Hex Kep, 6-32 (18)
3.	130222	Exit, Coin, Door,Weldment
4.	230001	Guide, Pin, Slide Lock, Belly Door
5.	450166	E-ring,.343id X .039 Groove
6.	230002	Pin, Actuation, Slide Lock, Belly Door
7.	710000	Lock,Barrel,.625 Long
8.	190713	Cam, Lock, Main & Belly, Door
9.	190006	Bkt, Coin Head Mnt
10.	450016	Nut, Hex Kep, 8-32 (4)
11.	610002	Head, Coin
12.	450086	Screw, Pan Head Phillips, M4X8 (4)
13.	610003	Backplate,Coin, 25¢
	610004	Backplate,5¢
	610007	Backplate,$1
	610008	Backplate,Coin,5¢ Token
	610009	Backplate,Coin,10¢ Token
	610011	Backplate,Coin,50¢ Token
	610029	Backplate, 50¢ Token, 1.170 Dia. X .075 Thick
14.	450222	Screw, Flat Head, M3X8 (2)
15.	330301	Assembly, Coin Panel
16.	530000	Comparitor, 5 Cent, Huc17, Coin Mech
17.	490152	Clamp, Vinyl Coated, 2 1/2, Black
18.	530140	Woofer, NSR
19.	450115	Screw, Sems, Pan Head Phillips, 8-32X1/4 (14)
20.	450356	Stay Door, 9.5"
21.	330337	Assy,Bill Entry,U/R
	330338	Assy,Bill Entry (69mm)
22.	190816	Dtl., Bkt., Speaker
23.	190839	Bezel,Exit Chute,Printer
24.	410138	Trim,Side,Main Door,LF
25.	410137	Trim,Side,Main Door,RT
26.	190836	Hinge, Door, Main
27.	190750	Speaker Grill (2)
28.	750000	Plate, Speaker (2)
29.	530029	Speaker, Rect., 8 Ohm, 5 Watt (2)
30.	450014	Nut, Hex Kep, 4-40 (11)
31.	130340	Crossmember,Top,Weldment
32.	130377	Plate,Cover,Mult. Denom,KS.wldmnt
33.	190874	Bkt,Mtg,Mult. Denom,Cover

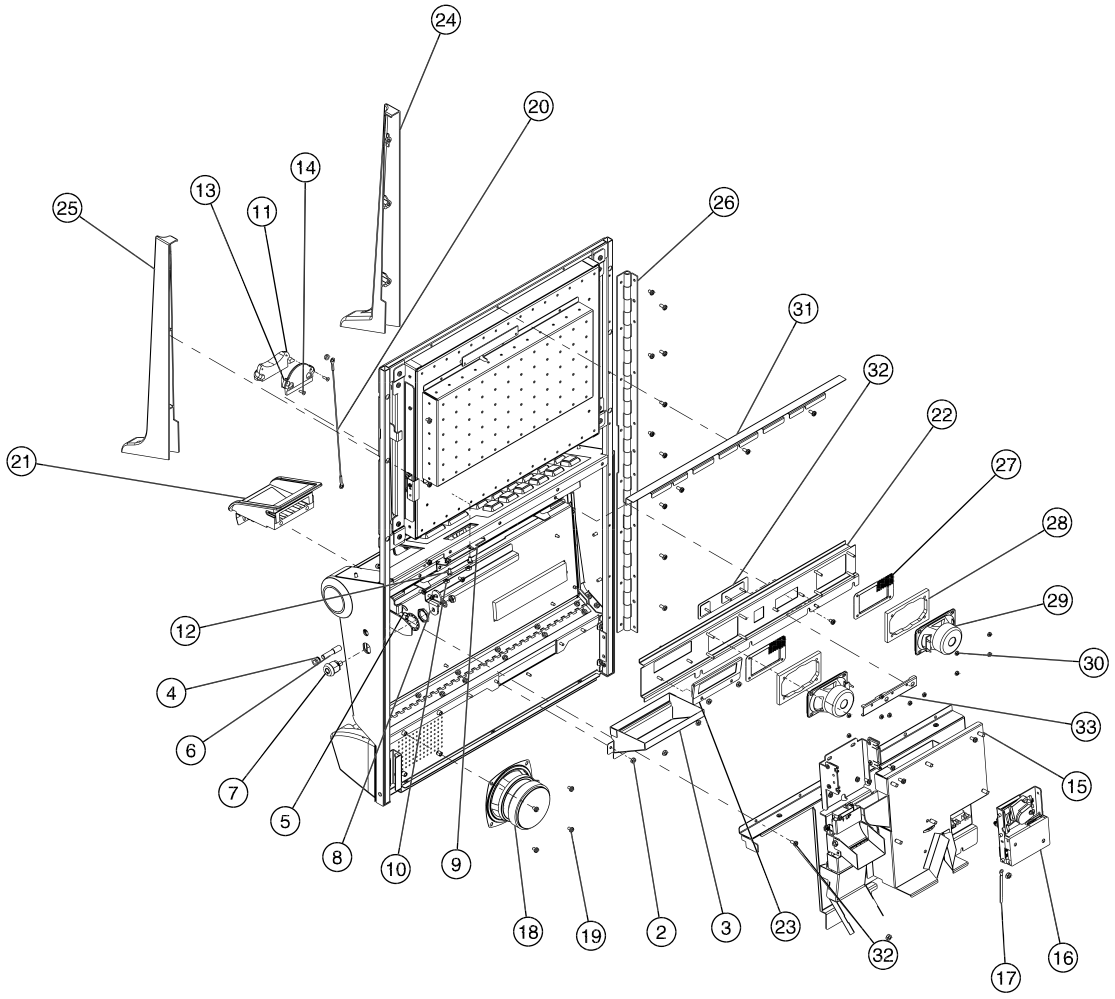

Main Topbox (Casino) Box Assembly

Item	Part #	Description
1.	130350	Top Box, Casino, Wldmnt, NP
2.	330012	Ballast&Starter
3.	450016	Nut, Hex Kep, 8-32 (2)
4.	190012	Plt,Serial Number,CUL
5.	450163	Rivet,Pop,1/8"Dia X 3/8" Long (4)
6.	190822	Bkt., Rtg., Glass, Bottom, Top Box
7.	450015	Nut, Hex Kep, 6-32 (12)
8.	190823	Bkt., Rtg., Glass, Top, Top Box
9.	Gl1002	Layout, Glass, Door, Top Box
10.	490044	Switch,Cherry,E79-30A
11.	190583	Panel, Ptm, Blank
12.	330111	Light, Fluorescent, Top Box, Casino
13.	450112	Screw, Sems, Pan Head Phillips, 6-32X3/8 (2)
14.	490003	Lmp,Fl,F15t8/Cw,Huc17

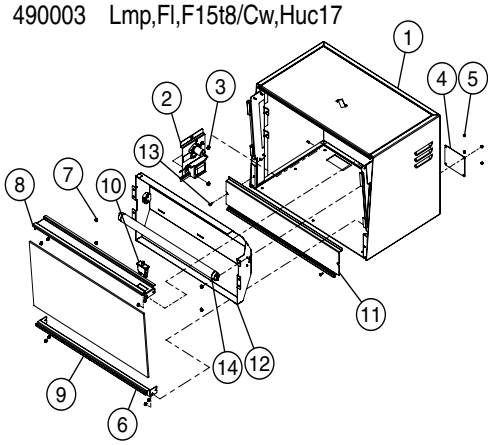

Main Topbox (Extended) Box Assembly

Item	Part #	Description
1.	330012	Ballast&Starter
2.	190822	Bkt., Rtg., Glass, Bottom, Top Box
3.	190823	Bkt., Rtg., Glass, Top, Top Box
4.	Gl-1034	Glass, Extended, Top Box, New Pl.
5.	330111	Light, Fluorescent, Top Box, Casino
6.	490003	Lmp,Fl,F15t8/Cw,Huc17
7.	450015	Nut, Hex Kep, 6-32 (12)
8.	450016	Nut, Hex Kep, 8-32 (2)
9.	190583	Panel, PTM, Blank
10.	190012	Plt,Serial Number,CUL
11.	450163	Rivet,Pop,1/8"Dia X 3/8" Long (4)
12.	450112	Screw, Sems, Pan Head Phillips, 6-32X3/8 (2)
13.	490044	Switch,Cherry,E79-30A
14.	130348	Top Box, Extended, Wldmnt, New Plat.

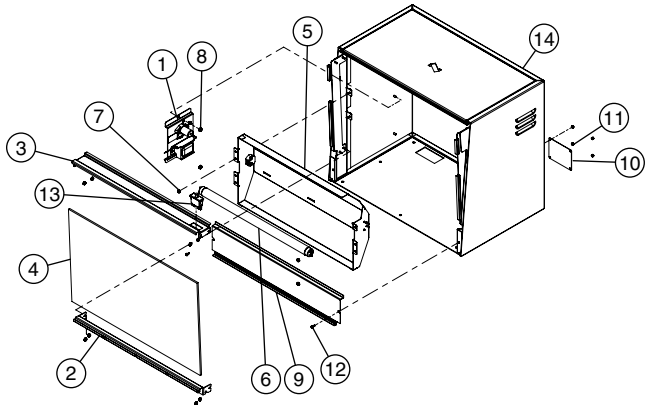

330334 Main Topbox (Casino) Door Assembly

Item	Part #	Description
1.	190820	Bkt., Rtg., Glass, Bottom, Top Box
2.	190821	Bkt., Rtg., Glass, Top, Top Box
3.	410133	Crossmember,Lower,Door,Tb
4.	410134	Crossmember,Upper,Door,Tb
5.	190831	Hook, Lwr, LF, Top Box Dr
6.	190832	Hook, Lwr, RT, Top Box Dr
7.	450115	Screw, Sems, Pan Head Phillips, 8-32X1/4 (2)
8.	450117	Screw, Sems, Pan Head Phillips, 8-32X3/8 (2)
9.	450392	Screw,Sems,Pan Head Phillips, 8-32-7/8 (2)
10.	450393	Screw,Sems,Pan Head Phillips,8-32-7/16 (2)
11.	410135	Trim,Door,Casino,Top RT
12.	410136	Trim,Door,Casino,Top,LF

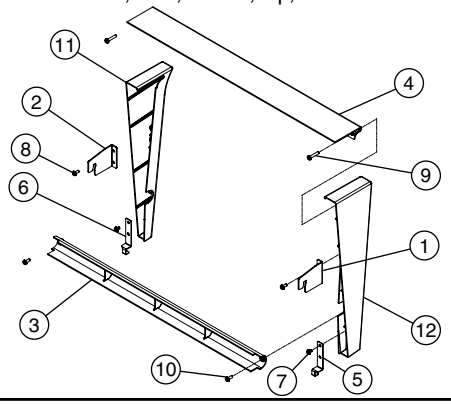

330335 Main Topbox (Extended) Door Assembly

Item	Part #	Description
1.	190820	Bkt., Rtg., Glass, Bottom, Top Box
2.	190821	Bkt., Rtg., Glass, Top, Top Box
3.	410133	Crossmember,Lower,Door,Tb
4.	410134	Crossmember,Upper,Door,Tb
5.	190831	Hook, Lwr, LF, Top Box Dr
6.	190832	Hook, Lwr, RT, Top Box Dr
7.	450117	Screw, Sems, Pan Head Phillips, 8-32X3/8 (4)
8.	450392	Screw,Sems,Pan Head Phillips, 8-32X7/8 (2)
9.	450394	Screw,Sems,Pan Head Phillips,8-32X3/16 (2)
10.	410130	Trim,Door,Ext Top Box,LF
11.	410131	Trim,Door,Ext Top Box,RT

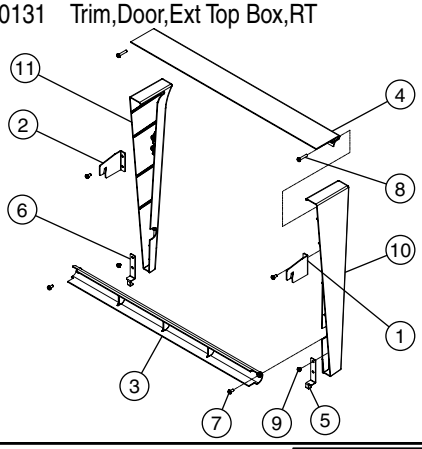

© 2004 KONAMI GAMING

Main Topbox (Round) Box Assembly

Item	Part #	Description
1.	130349	Top Box, Round, Wldmnt, Np
2.	190583	Panel, Ptm, Blank
3.	450110	Screw, Sems, Pan Head Phillips, 6-32X1/4 (4)
4.	330152	Assy, Fluorescent, Top Box, Round
5.	450015	Nut, Hex Kep, 6-32 (4)
6.	190280	Bkt, Mnt, Switch, B\V Door
7.	490044	Switch,Cherry,E79-30A
8.	490316	Lmp, Fl, Round, 22W
9.	190110	Mount, Candle, Round Top
10.	450117	Screw, Sems, Pan Head Phillips, 8-32X3/8 (2)
11.	190012	Plt,Serial Number,CUL
12.	450163	Rivet,Pop,1/8"Dia X 3/8" Long (4)

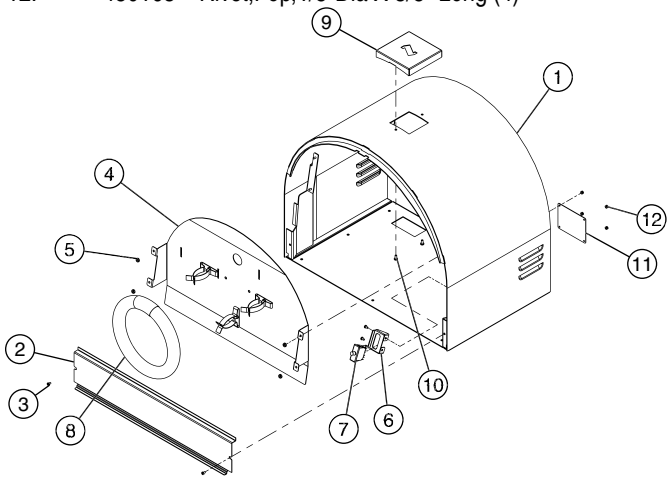

330336 Main Topbox (Round) Door Assembly

Item	Part #	Description
1.	190915	Bkt,Mtg,Top Box Door, Rnd.
2.	190835	Bkt., Door, Hook, LF, Round Top
3.	190834	Bkt., Door, Hook, RT., Round Top
4.	410133	Crossmember,Lower,Door,Tb
5.	410132	Door,Rd Top Box,Venture S.
6.	190831	Hook, Lwr, LF, Top Box Dr
7.	190832	Hook, Lwr, RT, Top Box Dr
8.	Gl1005	Layout, Glass, Round Top
9.	450015	Nut, Hex Kep, 6-32 (2)
10.	190838	Rtnr, Glass, LF
11.	190837	Rtnr, Glass, RT
12.	450110	Screw, Sems, Pan Head Phillips, 6-32X1/4 (2)
13.	450115	Screw, Sems, Pan Head Phillips, 8-32X1/4 (4)
14.	450117	Screw, Sems, Pan Head Phillips, 8-32X3/8 (2)

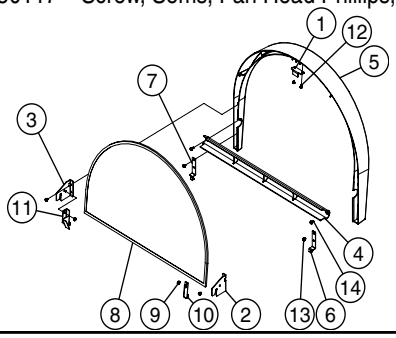

330095 Bill Validator Housing Assembly

Item	Part #	Description
1.	190095	Bracket, Switch, Dual, Cash Box
2.	190048	Cam, Door, BV
3.	190598	Door, BV
4.	130260	Housing, BV, Weldment
5.	710000	Lock,Barrel,.625 Long
6.	450015	Nut, Hex Kep, 6-32 (2)
7.	450016	Nut, Hex Kep, 8-32 (4)
8.	450144	Nut, Nylok, 2-56 (4)
9.	490046	Switch,Omron,Sbmin,W/Roller Actuator (2)
N/S	110056	Hrns,Bill Stacker Switch 2 (JCM)
N/S	110055	Hrns,Bill Stacker Switch 1 (JCM)

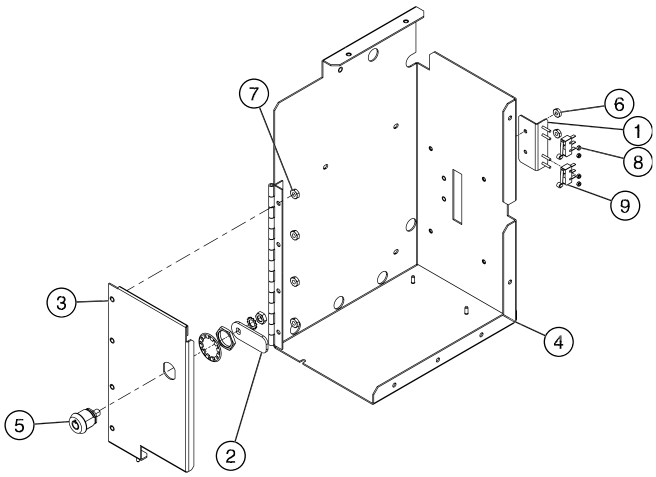

330099 BV Door Switch Assembly

Item	Part #	Description
1.	190596	Bracket, Switch, BV Door
2.	450144	Nut, Nylok, 2-56 (2)
3.	490050	Switch,Omron,Sbmin, W/Lever Actuator
N/S	110054	Hrns,Bill Door Switch

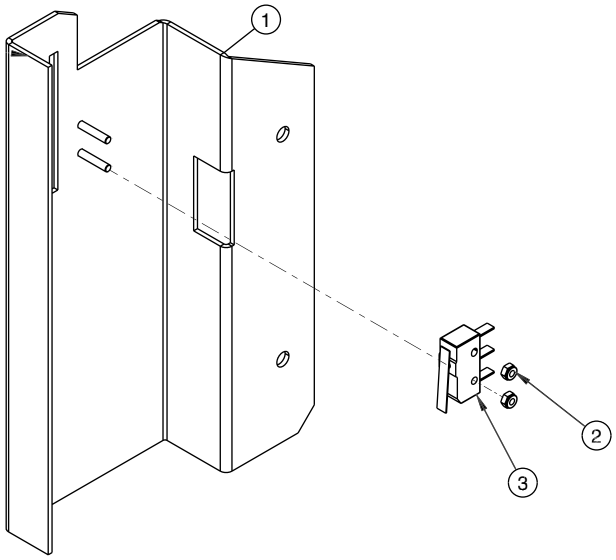

 © 2004 KONAMI GAMING

330094 Power Control Panel Assembly

Item	Part #	Description
1.	530032	Connector, AC
2.	830074	Decal,AC 115V In, 10A
3.	830236	Decal,AC 115V In,Arrow
4.	830058	Decal,Checking Or Replacing Fuse
5.	830061	Decal,Earth Ground
6.	830068	Decal,Fuse,250V,2A,115VAC (3)
7.	830069	Decal,Fuse,250V,5A,115VAC
8.	830235	Decal,Master Fuse,250V 10A 115VAC,Arrow
9.	830075	Decal,Master Fuse,250V,10A 115VAC
10.	830056	Decal,Replace Same Fuse (2)
11.	830234	Decal,Switched Outlet,Max 1A
12.	830057	Decal,Turn Off Power,Electric Shock
13.	830138	Decal,Unswitched Outlet,1A Max
14.	490290	Filter, Noise, NSR
15.	490036	Fuse,10A,Dia6.4X31.8
16.	490033	Fuse,2A,Dia6.4X31.8 (3)
17.	490034	Fuse,5A,Dia6.4X31.8
18.	490055	Holder,Fuse,3453IF1-010 (5)
19.	490056	Holder,Fuse,Knob,3453IF1-020 (5)
20.	190589	Housing, AC Box
21.	450015	Nut, Hex Kep, 6-32 (2)
22.	490079	Outlet, Convenience, 120 Volt (3)
23.	450161	Screw, Connector Mounting (2)
N/S	110050	Hrns,Hopper
N/S	110234	Hrns,AC Inside
N/S	110231	Hrns,AC Inlet,NSR

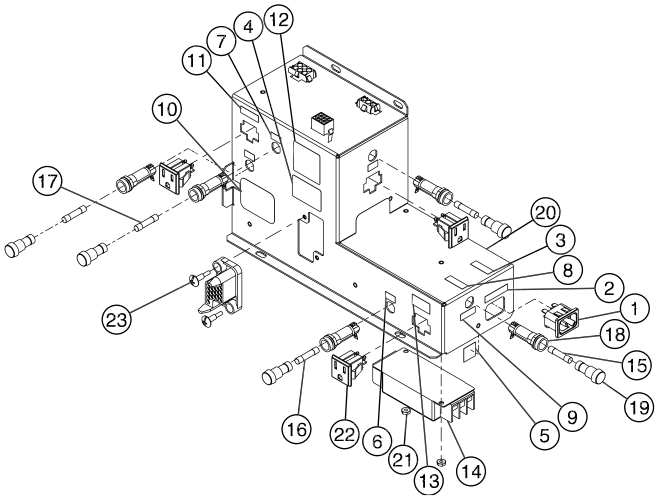

CAUTION : Incorrect fuse replacement can result in damage, injury or serious bodily harm. Replace fuses with ones of the same type and electrical rating.

330297 CPU Housing Assembly

Item	Part #	Description
1.	130339	CPU,Hsg,New,Wdmt
2.	530054	Fan, Logic Box, 600mm Harness
3.	190070	Fan,Guard,3.25" Mounting
4.	450015	Nut, Hex Kep, 6-32 (8)
5.	190035	Door, Housing, CPU
6.	710000	Lock,Barrel,.625 Long
7.	190020	Cam, Lock, CPU Door
8.	530219	PCB,1.5 KS Backplane
9.	450108	Screw, Sems, Pan Head Phillips, 4-40X3/8 (14)
10.	450146	Guide, PCB, 6in, Hsg, CPU (6)
11.	530013	PCB,I/OAB-2
12.	330001	Unit, CD/Logic
13.	450110	Screw, Sems, Pan Head Phillips, 6-32X1/4 (2)
14.	530012	PCB, I/OBB-2
15.	530014	PCB, COMB-2
N/S	450389	Lock,Wire,Security

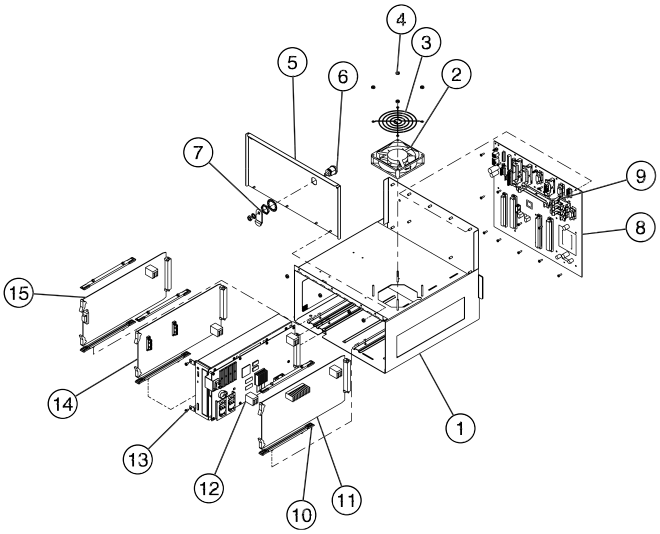

NOTE : Each 6-32 screw secures a grounded connection between the backplane board and the game. All screws are required for proper operation.

330303 Power Supply Assembly

Item	Part #	Description
1.	190592	Bkt., Retaining, SSR
2.	190848	Bkt.,Rtg, Power Supply
3.	190591	Cover, Power Supply
4.	830080	Decal, Service Phone Number
5.	830076	Decal,Main Power,On/Off
6.	830056	Decal,Replace Same Fuse
7..	190825	Housing, Power Supply
8.	450015	Nut, Hex Kep, 6-32
9.	490288	Power Supply,24V
10.	450107	Screw, Sems, Pan Head Phillips, 4-40X1/4 (9)
11.	450109	Screw, Sems, Pan Head Phillips, 6-32X1/2 (2)
12.	450110	Screw, Sems, Pan Head Phillips, 6-32X1/4 (4)
13.	450112	Screw, Sems, Pan Head Phillips, 6-32X3/8 (2)
14.	490289	SSR,I/O,Power Supply
15.	490359	Supply,Power,12V 150W
16.	490067	Switch, Rocker, Illuminated, Mini Euro Style
N/S	110305	Hrns,KS,Power Supply

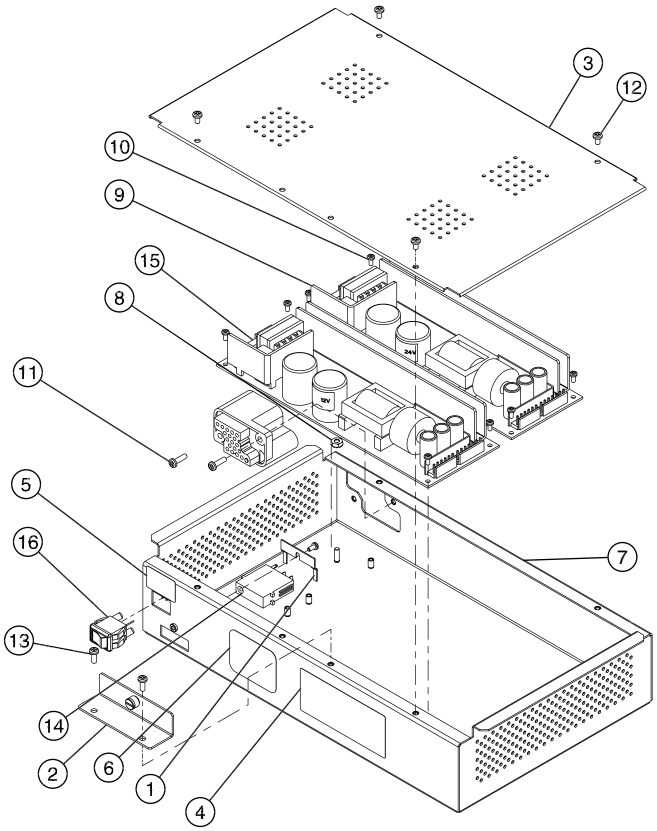

330003 Hard Meter Assembly

Item	Part #	Description
1.	130032	Bkt, Meter, Wldmnt
2.	830064	Decal,Meters,Coin To Cashbox
3.	830065	Decal,Meters,Jackpot Balance
4.	830066	Decal,Meters,Total Bill
5.	830062	Decal,Meters,Total In
6.	830063	Decal,Meters,Total Out
7.	530021	PCB,Counter BD-2
8.	450110	Screw, Sems, Pan Head Phillips, 6-32X1/4 (2)

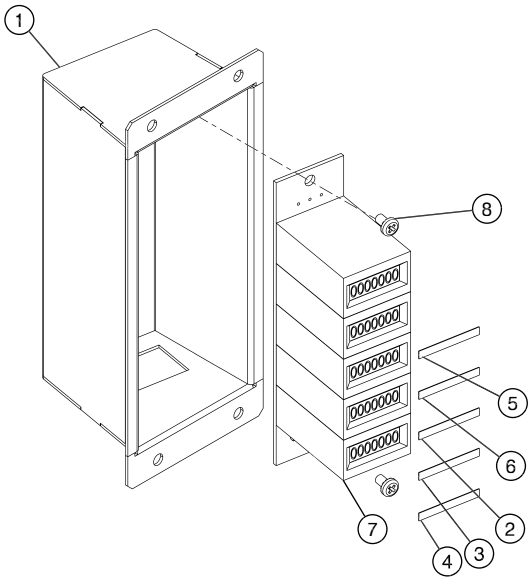

330300 Coin Bowl Assembly

Item	Part #	Description
1.	190575	Backplate, Coin Bowl
2.	190840	Bkt., Mtg., Coin Tray (2)
3.	190670	Bottom, Coin Bowl
4.	610033	End Cap, Coin Bowl, LF
5.	610032	End Cap, Coin Bowl, RT
6.	450049	Screw, Flat Head, 6-32X1/4 (2)
7.	450110	Screw, Sems, Pan Head Phillips, 6-32X1/4 (3)
8.	450117	Screw, Sems, Pan Head Phillips, 8-32X3/8 (4)

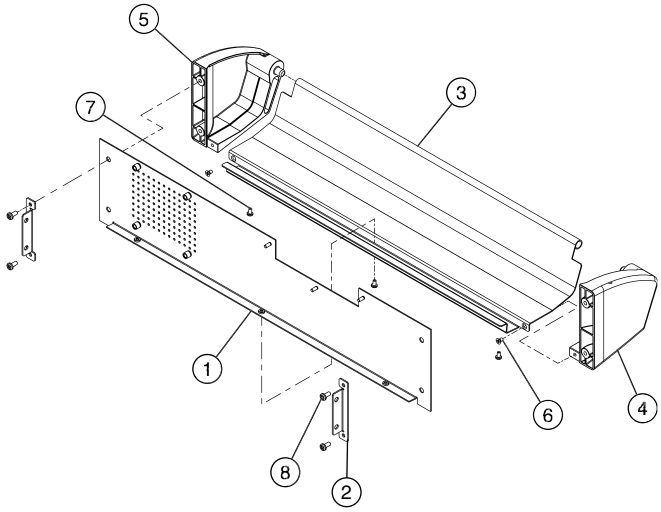

© 2004 KONAMI GAMING

330173 Bolster Assembly

Item	Part #	Description
1.	310173	Bolster, Main Door
2.	410100	End Cap,Door (2)
3.	450115	Screw, Sems, Pan Head Phillips, 8-32X1/4 (4)

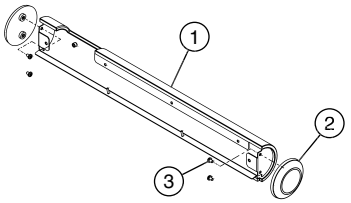

330304 Coin Handling Assembly

Item	Part #	Description
1.	190824	Bkt., Guide, Drop Chute
2.	190817	Bkt., Mtg., Lower, Coin Handling
3.	230010	Bushing,Guide,Cn Diverter
4.	410012	Chute, Reject
5.	130040	Chute,Drop,Coin
6.	190063	Chute,Hopper
7.	410021	Clip, Mount, Acceptor, Coin (2)
8.	410010	Diverter
9.	450164	E-ring,3mm Shaft Size X .5mm Groove (3)
10.	190819	Frame, Coin Handling
11.	130037	Guide,Coin Handling,Wldmnt
12.	190818	Link, Actuator Diverter
13.	450016	Nut, Hex Kep, 8-32 (2)
14.	230012	Pin, Pivot, Diverter
15.	450002	Pin, Spring, .125 Dia X .375 Long
16.	230014	Pin, Stop, Diverter
17.	450049	Screw, Flat Head, 6-32X1/4 (4)
18.	450107	Screw, Sems, Pan Head Phillips, 4-40X1/4 (5)
19.	450109	Screw, Sems, Pan Head Phillips, 6-32X1/2
20.	450110	Screw, Sems, Pan Head Phillips, 6-32X1/4 (4)
21.	450120	Screw, Sems, Pan Head Phillips, M3X4 (2)
22.	490065	Sensor,Photo,Aleph
23.	530026	Solenoid,Diverter (Gm#88653)
24.	450165	Spring, Solenoid
N/S	110315	Hrns,KS,Coin Track

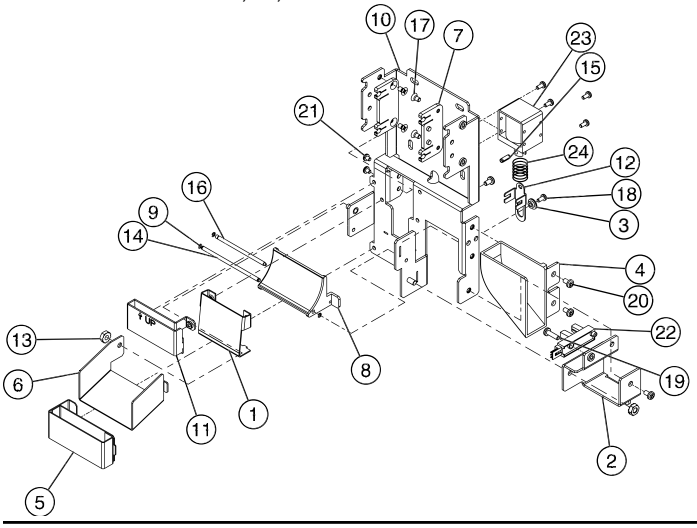

330302 Belly Door Assembly

Item	Part #	Description
1.	130346	Frame, Door, Belly, Weldment
2.	860131	Gls,Bly,KS,Clear
3.	130347	Frame, Belly, Main Door,Weldment
4.	310179	Belly Door,Light Pnl
5.	450015	Nut, Hex Kep, 6-32 (10)
6.	190008	Hinge, Door, Belly
7.	450391	Nylon,Spacer,D .140, D .250, L .220 (4)

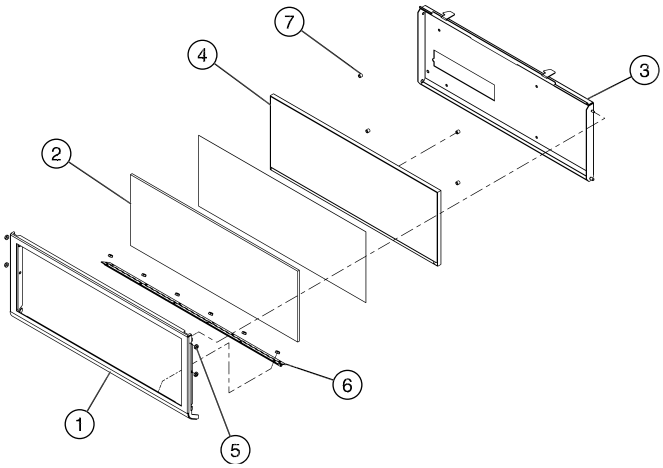

NOTE : This assembly can accept both glass with art printed on it and clear glass and art printed on the film (shown on this drawing).

330035 Seiko Printer Assembly
330058 Ithaca 850 Printer Assembly
330039 Ithaca 860 Printer Assembly

Item	Part #	Description
1.	410026	Bezel, Seiko Printer
2.	190136	Bkt., Mnt., Illumination PCB, Prntr, Seiko
3.	530039	PCB, Illumination, Bezel, Printer, Seiko
4.	310006	Printer, Seiko, PSA-66-ST
	310039	Printer, Ithaca 860
	310037	Printer, Ithaca 850
5.	450167	Screw, Pan Head Phillips, M3X12 (2)
6.	450121	Screw, Sems, Pan Head Phillips, M3X5 (6)
7.	190135	Tray, Ticket, Prntr, Seiko, 200 Ticket Capy
	190195	Tray, Ticket, Prntr, Ithaca, 200 Ticket Capy

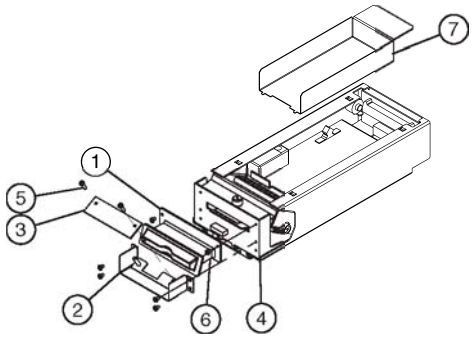

 © 2004 KONAMI GAMING

330305 Printer,Seiko,Gen 2 Assembly

Item	Part #	Description
1.	310172	Assy,Printer,Seiko,Gen2
2.	410142	Bezel,Next Gen, A.S.
3.	530214	PCB, Illumination, Future Logic, N/G
4.	450121	Screw, Sems, Pan Head Phillips, M3X5 (4)

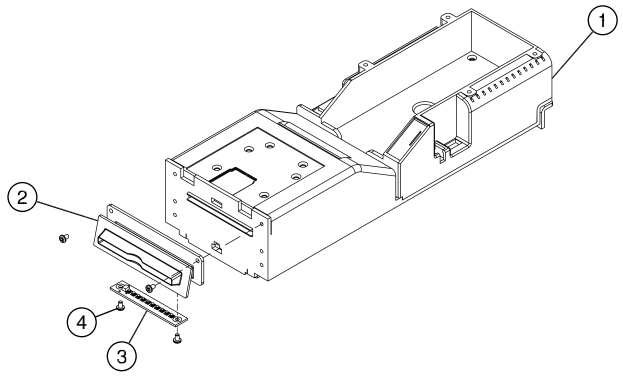

330301 Coin Panel Assembly

Item	Part #	Description
1.	230000	Bushing, Slide Lock, Belly Door (2)
2.	130033	Chute, Drop, Wldmnt
3.	130223	Chute, Hopper, Door, Weldment
4.	330304	Coin Handling
5.	450015	Nut, Hex Kep, 6-32
6.	130227	Panel, Coin, Main Door, Weldment
7.	450115	Screw, Sems, Pan Head Phillips, 8-32x1/4 (6)
8.	450117	Screw, Sems, Pan Head Phillips, 8-32x3/8 (3)
9.	190577	Slide Bar, Belly Door
10.	450183	Spacer, #6, .25 Dia X .25 Long, Nylon
11.	450160	Spring, Extension, .25dia X 1long
12.	490044	Switch,Cherry,E79-30A
13.	450176	Washer, #8 Flat

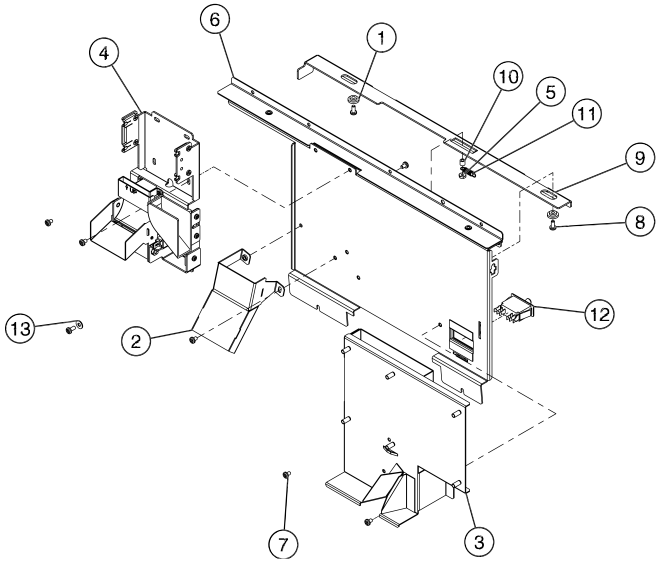

330111 Top Box Fluorescent Assembly

Item	Part #	Description
1.	830059	Decal,Heated Surface
2.	190611	Panel, Fl Lamp, Top Box
3.	490051	Socket,Fluorescent (2)
N/S	110302	Hrns,FL Tube Socket

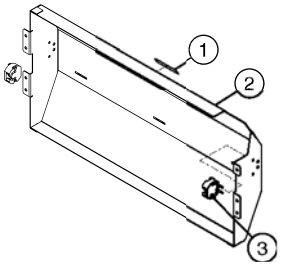

330344 Assy,Pnl, Light Reflt. Ext. Top Box

Item	Part #	Description
1.	190916	Pnl, Light Reflector, Ext.top Box
2.	490051	Socket,Fluorescent (4)
N/S	110302	Hrns,Fl,Tube Socket (2)

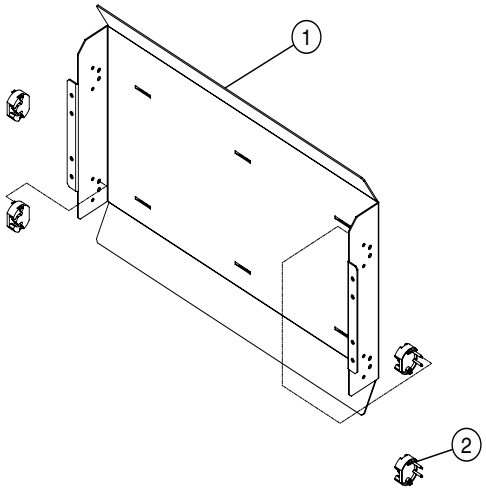

330152 Fluorescent Lt. Assembly Round Top Box

Item	Part #	Description
1.	490315	Ballast, Round Fl., FC8T9
2.	450015	Nut, Hex Kep, 6-32 (5)
3.	190647	Panel, Fl, Lamp, Round, Top Box
4.	490051	Socket,Fluorescent (2)
5.	450367	Spring Clip (3)
N/S	110302	Hrns,Fl Tube Socket
N/S	110323	Hrns,As,Ballast,R-top

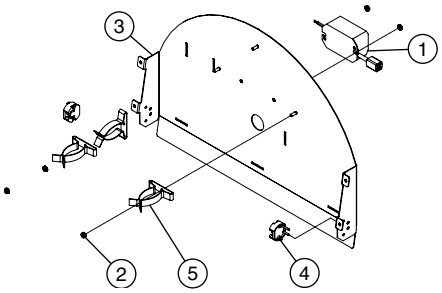

© 2004 KONAMI GAMING

330012 Ballast & Starter Assembly

Item	Part #	Description
1.	490054	Ballast,13-22watt
2.	830060	Decal,Caution,High Voltage
3.	450015	Nut, Hex Kep, 6-32
4.	190051	Plate, Ballast/Starter
5.	450110	Screw, Sems, Pan Head Phillips, 6-32X1/4 (2)
6.	450112	Screw, Sems, Pan Head Phillips, 6-32X3/8 (2)
7.	490052	Socket,Starter
8.	490001	Strtr,FS2,Huc17
N/S	110301	Hrns,Fl Ballast

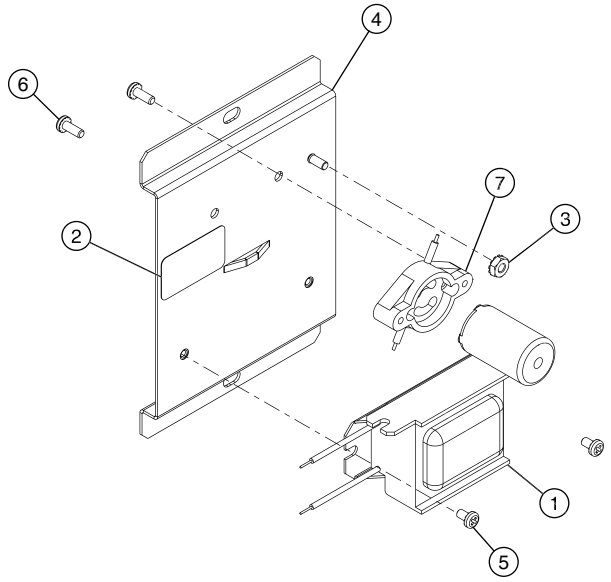

330299 Button Panel (Multi-Line) Assembly

Item	Part #	Description
1.	490323	Button, Large, Rect, LED, W/Clear Lens (2)
2.	490324	Button, Small, Square, LED, W/Clear Lens (12)
3.	190844	Panel, Button, Multi-line
N/S	110314	Hrns,KS,Play Button,Multi-line

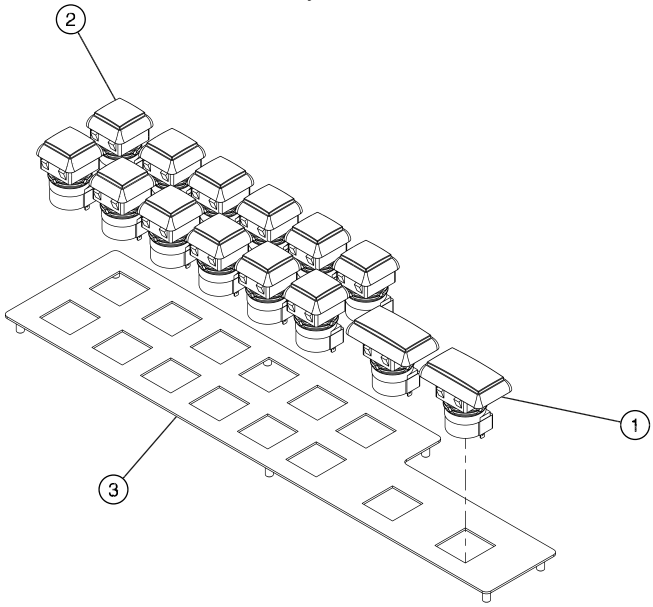

530218 19" LCD Assembly

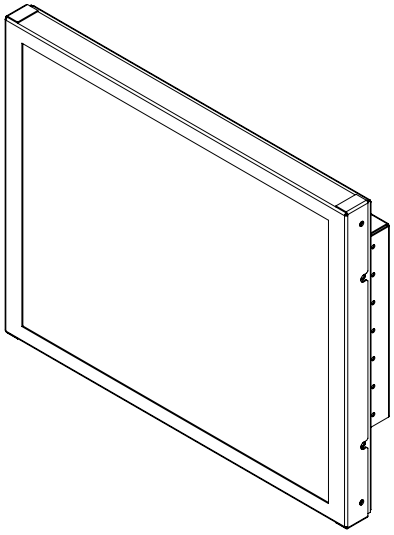

NOTE : LCD parts are covered by a Direct Exchange System. Please contact your Konami representative for more information when ordering these parts.

310001 Bill Validator Assembly (JCM WBA 13)
310010 Bill Validator Assembly (JCM WBA 12SS)
310027 Bill Validator Assembly (Mars ZT-1207)
310092 Bill Validator Assy (MARS,SC66XX,Cashflow)

Item	Part #	Description
1.	N/A	Chassis,Bill Validator,JCM,WBA13
2.	310000	Box,Cash,ForBV,WBA 12 & 13
	310029	Box,Cash,For/BV,MARS ZT-1207
	310093	Box,Cash,Mars SC Series,Cashflow
3.	310014	Head,Bill Validator,JCM,WBA 13
4.	310015	Transport,Bill Validator,JCM,WBA 13
	310028	RTU, Bill Validator, MARS ZT-1207

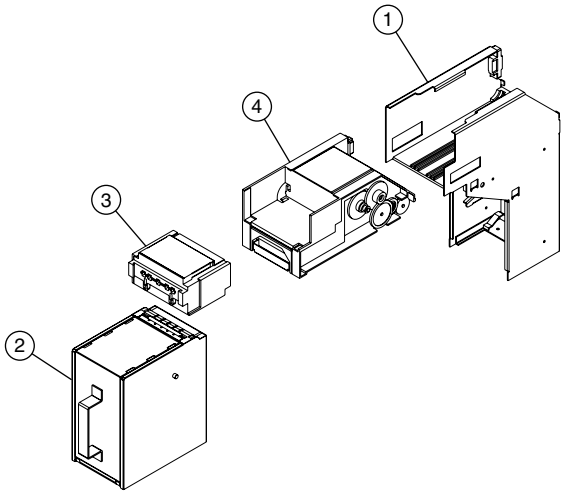

NOTE : Bill Validator parts are covered by a Direct Exchange System. Please contact your Konami representative for more information when ordering these parts.

© 2004 KONAMI GAMING

Hopper Assembly

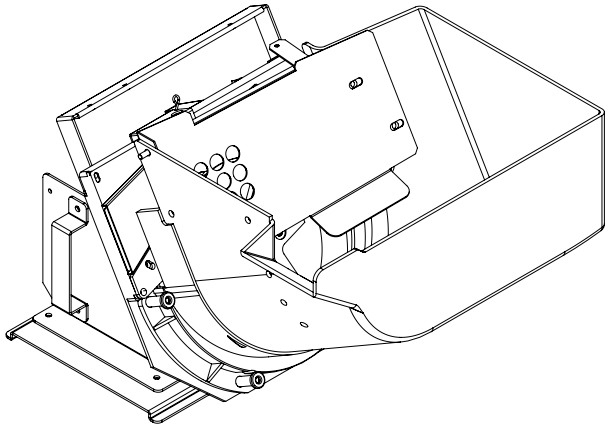

NOTE : Hopper parts are covered by a Direct Exchange System. Please contact your Konami representative for more information when ordering these parts.

330367 Bill Entry Assembly
330368 Bill Entry Assembly (69MM)

Item	Part #	Description
1.	830093	Decal,Insert Bill,Bill Entry,UR
2.	410007	Entry,Bill,Door
3.	410020	Guide,Bill(A),Door
	410040	Guide,Bill,69mm,Main Door
4.	530212	PCB,KS,Bilb,Bill Entry, III
5.	190043	Plate,Entry,Door
6.	410006	Plex,Entry,Bill
7.	450121	Screw, Sems, Pan Head Phillips, M3X5 (2)
8.	450128	Screw, Sems, Pan Head Phillips, M4X8 (4)
9.	190042	Stay,Entry,Bill,Door

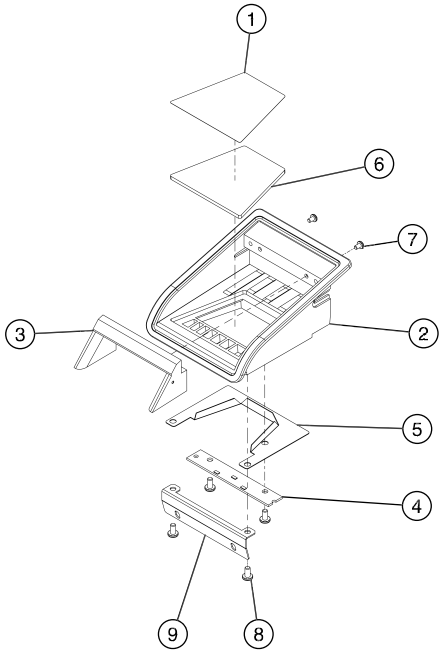

630004 Signal Tower, Two Tier, Chrome (Tall)
630007 Signal Tower, Two Tier, Chrome (Short)
630016 Signal Tower, Two Tier, Gold (Short)
630015 Signal Tower, Two Tier, Gold (Tall)
630025 Signal Tower,3 Tier,Short,Chrome
630026 Signal Tower,3 Tier,Short,Gold

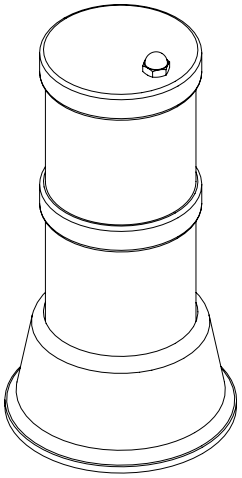

SIGNAL TOWER FILTER PART NUMBERS	
Part Number	**Description**
630001	FILTER,TALL,YLWE
630002	FILTER,TALL,RED
630005	FILTER,TALL,BLUE
630008	FILTER,TALL,ORANGE
630009	FILTER,TALL,GREEN
630018	FILTER,TALL,PINK
630010	FILTER,SHORT,RED
630011	FILTER,SHORT,BLUE
630012	FILTER,SHORT,YLW
630013	FILTER,SHORT,GREEN
630014	FILTER,SHORT,ORANGE
630017	FILTER,TALL,BROWN
630018	FILTER,TALL,PINK
630019	FILTER,SHORT,BROWN
630020	FILTER,SHORT,PINK
630021	FILTER,YELLO/GREEN/BLUE,MU-LTI-DENOM
630022	FILTER,YELLOW/ORANGE/BLUE,-MULTI DENOM
630023	FILTER,2 TIER,SHORT,PURPLE
630024	FILTER,2 TIER,TALL,PURPLE

 © 2004 KONAMI GAMING

330001 CD/Logic Assembly
330103 CD/Logic Assembly (Low Profile)

Item	Part #	Description
1.	190036	Box, CD-ROM Dr, Logic
2.	310003	Drive, CD ROM
	330171	Drive,CD-ROM (Low Profile)
3.	530030	PCB,Unit,Mn Cntrl-1 & Non-vol Mem Bds-2
4.	450191	Screw, Pan Head Phillips, 2-56 X 1/2 (2)
5.	450121	Screw, Sems, Pan Head Phillips, M3X5 (4)
6.	450123	Screw, Sems, Pan Head Phillips, M3X8 (9)
7.	490046	Switch, Micro, Logic Box
N/S	110002	Hrns, Power Supply, CD ROM
N/S	110001	Hrns, Ribbon Cable, CD ROM Drive
N/S	110003	Hrns, Switch, Door, Logic Box

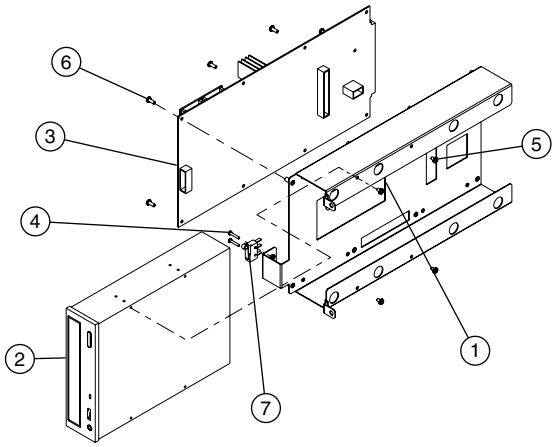

NOTE : 530030 is sold as an assembly. The PCB, Main Prcssr, MCTB-2 can be ordered using Part# 530019. The PCB, Non Volatile Mem BD-2 can be ordered using Part# 530020.

330171 CD Assembly (Low Profile)

Item	Part #	Description
1.	190581	Bkt., CDD(A), Logic
2.	190582	Bkt., CDD(B), Logic
3.	310088	CD-ROM Drive, Low Profile, Teac, CD-224E
4.	530147	CDROM, Drive, Atapi (I/F PCB)
5.	450147	Screw, Pan Head Phillips, M2X3 (4)
6.	450151	Screw, Pan Head Phillips, M2X8 (2)
N/S	110260	Hrns,CD-ROM Adapter

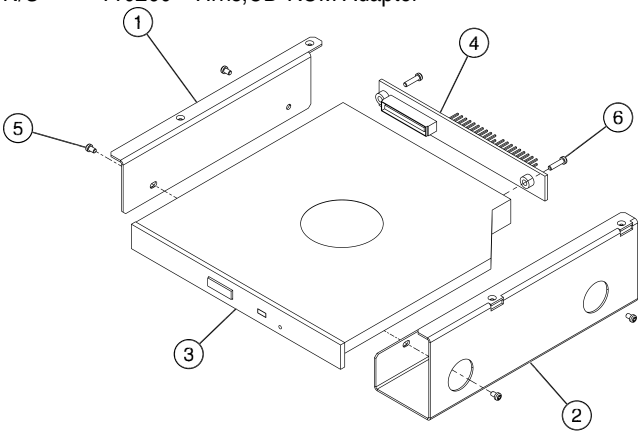

330296 Door Sensor Assembly (Cabinet)

Item	Part #	Description
1.	190846	Bkt,Mtg,Door Optic, Cabinet, KS
2.	490354_1	Optic, Door Switch, Door Side, Puerto Rico
3.	450107	Screw, Sems, Pan Head Phillips, 4-40x1/4

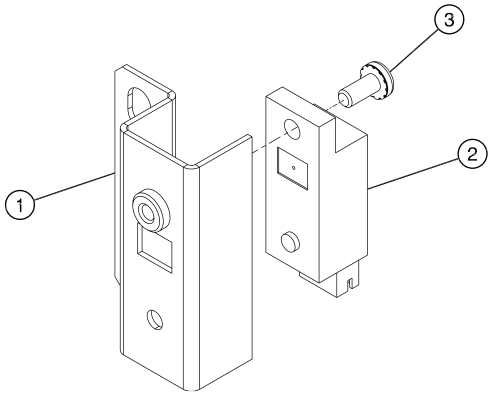

330295 Door Sensor Assembly (Door)

Item	Part #	Description
1.	190847	Bkt,Mtg,Door Optic, Door, KS
2.	490354_2	Optic, Door Switch, Cabinet Side, Puerto Rico
3.	450107	Screw, Sems, Pan Head Phillips, 4-40X1/4

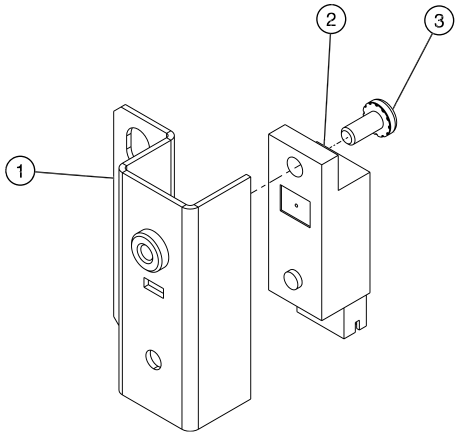

© 2004 KONAMI GAMING

Troubleshooting Charts

Use the following charts to troubleshoot and diagnose errors.

CAUTION: Distributors, Operators, and Users are not to modify the equipment for any other use. Konami Gaming, Inc. cannot be held liable for damages or injuries resulting from use or modification of this equipment. Konami Gaming, Inc. cannot be held liable for damages or injuries arising from improper or unsupervised installation, modification, or use of equipment not manufactured or approved by Konami Gaming, Inc. This equipment is designed as a gaming device for amusement only, for sale and use in jurisdictions permitting such devices.

CAUTION: Only **QUALIFIED PERSONNEL** should service this machine. Personal injury or damage to the equipment can be caused by improper service or maintenance.

Reset/Start Errors

RESET/START				
Code	**Screen Message**	**Description**	**Solution**	**Reset**
001	None	Reset/Start	No Action Required.	No

Door Status Errors

DOOR STATUS				
Code	**Screen Message**	**Description**	**Solution**	**Reset**
010	Main Door Open	Main Door Was Opened.	Close Main Door.	Auto
011	None	Main Door Was Closed.	No Action Required.	No
012	Drop Door Open	Drop Door Was Opened.	Close Drop Door.	Auto
013	None	Drop Door Was Closed.	No Action Required.	No
014	Logic Door Open	Logic Door Was Opened.	Close Logic Door.	Auto
015	None	Logic Door Was Closed.	No Action Required.	No
016	Sub Door Open	Sub Door Was Opened.	Close Sub Door.	Auto
017	None	Sub Door Was Closed.	No Action Required.	No
018	Bill Door Open	Bill Door Was Opened.	Close Bill Stacker Door.	Auto
019	None	Bill Door Was Closed.	No Action Required.	No
020	Maintenence Door Open	Maintenence Door Was Opened.	Close Maintenenc-e Door	Auto
021	None	Maintenence Door Was Closed.	No Action Required.	No
022	Fill Box Door Open	Fill Box Door Was Opened.	Close Fill Box Door.	Auto
023	None	Fill Box Door Was Closed.	No Action Required.	No
024	Top Box Door Open	Top Box Door Was Opened.	Close Top Box Door.	Auto
025	None	Top Box Door Was Closed.	No Action Required.	No

 © 2004 KONAMI GAMING

Attendant Pay Codes

ATTENDANT PAY				
Code	Screen Message	Description	Solution	Reset
080	Attendant Pay	Attendant Pay Occured.	Jackpot Reset.	Reset Key
081	None	Attendant Pay Reset.	No Action Required.	No
082	Jackpot	Jackpot Hit.	Jackpot Reset.	Reset Key
083	None	Jackpot Reset.	No Action Required.	No
084	Progressive n	Progressive Hit (n=Level)	Jackpot Reset.	Reset Key
085	None	Progressive Reset.	No Action Required.	No

Coin Acceptor/Diverter Errors

COIN ACCEPTOR/DIVERTER				
Code	Screen Message	Description	Solution	Reset
100	Coin In Error	Coin Acceptor Abnomality Detected.	Check Coin Path.	Reset Key
101	Coin In Error	Coin In Signal Sequence Error Detected.	Attendant Reset.	Reset Key
102	Diverter Malfunction	Coin Diverter Unit Malfunction.	Attendant Reset.	Reset Key
103	Coin Acceptor Malfunction	Illegal Coin In Signal Pulse Failed Port Is Sense.	Check Coin Acceptor.	Reset Key
104	Coin Acceptor Malfunction	Illegal Coin In Signal Pulse Failed Port Is Credit.	Check Coin Acceptor.	Reset Key
105	Coin Acceptor Malfunction	Illegal Coin In Signal Pulse Failed Port Is Drop.	Check Coin Acceptor.	No
106	Extra Coin In n coin(s)	Coin In Detected During Inhibition Of Coin In (n = number of inappropriate coin in.	Attendant Reset.	Reset Key
107	None	Reset Extra Coin In.	No Action Required.	No

COIN ACCEPTOR/DIVERTER				
Code	Screen Message	Description	Solution	Reset
108	Coin Acceptor Malfunction	Illegal Coin In Signal Pulse Failed Port Is Coin In Sensor.	Check Coin Acceptor.	Reset Key
109	Diverter Malfunction	Coin Diverter Unit Malfunction.	Check Coin Diverter.	Reset Key
110	Coin Acceptor Malfunction	Coin In Signal Sequence Error Detected.	Check Coin Acceptor.	Reset Key
111	Coin Acceptor Malfunction	Coin In Signal Sequence Error Detected Acceptor Or Coin In.	Check Coin Acceptor.	Reset Key

Hopper Errors

HOPPER				
Code	Screen Message	Description	Solution	Reset
120	Hopper Empty or Jam	Hopper is Empty Or Jammed.	Check Hopper. Attendant Reset.	Reset Key
121	Coin Out Switch Jam	Hopper Coin Out Sensor Is Faulty.	Check Hopper. Attendant Reset.	Reset Key
122	Hopper Overpay n coin(s)	Hopper Overpaid Coins. n = paid coins	Attendant Reset.	Reset Key
123	Hopper Runaway n coin(s	Hopper Runaway Detected. n = paid coins	Attendant Reset.	Reset Key
124	Hopper Disconnect	Hopper Is Disconnected.	Check Hopper.	Auto
126	None	Reset Hopper Overpay Error.	No Action Required.	No
127	None	Reset Hopper Runaway Error.	No Action Required.	No

© 2004 KONAMI GAMING

Electromechanical Meter Errors

ELECTROMECHANICAL METERS				
Code	Screen Message	Description	Solution	Reset
130	EM Counter Accessed	EM Counter Was Accessed.	Check EM Counter Circuit.	Auto
131	EM Counter 1 Error	EM Counter 1 is Disconnected.	Check Connections To EM Counter 1.	Auto
132	EM Counter 2 Error	EM Counter 2 is Disconnected.	Check Connections To EM Counter 2.	Auto
133	EM Counter 3 Error	EM Counter 3 is Disconnected.	Check Connections To EM Counter 3.	Auto
134	EM Counter 4 Error	EM Counter 4 is Disconnected.	Check Connections To EM Counter 4.	Auto
135	EM Counter 5 Error	EM Counter 5 is Disconnected.	Check Connections To EM Counter 5.	Auto
136	EM Counter 6 Error	EM Counter 6 is Disconnected.	Check Connections To EM Counter 6.	Auto
137	EM Counter 7 Error	EM Counter 7 is Disconnected.	Check Connections To EM Counter 7.	Auto
138	EM Counter 8 Error	EM Counter 8 is Disconnected.	Check Connections To EM Counter 8.	Auto
139	EM Counter 9 Error	EM Counter 9 is Disconnected.	Check Connections To EM Counter 9.	Auto
140	EM Counter 10 Error	EM Counter 10 is Disconnected.	Check Connections To EM Counter 10.	Auto

Bill Validator Errors

BILL VALIDATOR				
Code	Screen Message	Description	Solution	Reset
220	BV Not Ready	Bill Validator Is Not Ready.	Check Cable Connections To Bill Validator.	Auto
221	BV Device Failure	Bill Validator Has A Hardware Failure.	Check Bill Validator.	Auto
222	Bill Jam In Acceptor	Bill Jam Detected In Acceptor.	Remove Jammed Bill From Bill Validator.	Auto
223	Bill Jam In Stacker	Bill Jam Detected In Stacker.	Remove Jammed Bill From Stacker.	Auto
224	Bill Stacker Full	Bill Stacker Full Detected.	Collect Bills From Bill Stacker.	Auto
225	Bill Stacker Removed	Bill Stacker Removed (Detected By Bill Validator).	Attach Bill Stacker.	Auto
226	Bill Stacker Not Ready	Bill Cashbox Is Not Ready.	Check Bill Valiidator.	Auto
227	BV Header Error	Bill Validator Head Removed.	Check Bill Validator.	Auto
228	Bill Transport Removed	Bill Transport Removed.	Attach Bill Transport.	Auto
229	BV Com Error	Link Was Down Between Gaming Machine.	Check Cable Connections To Bill Validator.	Auto
230	BV Error	Cheat Status Returned By Bill Validator.	Check Bill Validator.	Auto
231	BV Error	Status Buffer Full Detected.	Check Bill Validator.	Auto
232	BV Error	Bill Validator Control Error Detected.	Check Bill Validator.	Auto
233	Bill Stacker Error	Bill Validator Error Occurred During Bill Stacking.	Check Bill Validator.	Auto

© 2004 KONAMI GAMING

DCNB (Door Connector PCB) Errors

DCNB (Door Connector PCB)				
Code	Screen Message	Description	Solution	Reset
270	DCNB Disconnect	DCNB Disconnected.	Check Door Connector PCB circuit.	Auto
271	DCNB Error	Failed Communication (BUSY 0)		Auto
272	DCNB Error	Failed Communication (BUSY 1)		Auto
273	DCNB Error	Failed Communication (BUSY 2)		Auto
274	DCNB Error	Failed Communication (BUSY 3)		Auto
275	DCNB Error	Failed Communication (BUSY 4)		Auto
276	DCNB Error	Failed Communication (ACK 0)		Auto
277	DCNB Error	Failed Communication (ACK 1)		Auto
278	DCNB Error	Failed Communication (ACK 2)		Auto
279	DCNB Error	Failed Communication (ACK 3)		Auto
280	DCNB Error	Failed Communication (ACK 4)		Auto
281	DCNB Error	Failed Communication (BUSY 5)		Auto
282	DCNB Error	Failed Communication (BUSY 6)		Auto
283	DCNB Error	Failed Communication (ACK 5)		Auto
284	DCNB Error	Failed Communication (ACK 6)		Auto

RTC (Real Time Clock) Errors

RTC (Real Time Clock)				
Code	Screen Message	Description	Solution	Reset
300	RTC Error	RTC Timer Error Detected.	Reboot Machine. If Error Reccurrs, Check Main Control PCB.	Reset Key
301	RTC Error	Failed Communication BUSY.		Reset Key

EL (Electronic Key) Errors

EL (Electronic) KEY				
Code	Screen Message	Description	Solution	Reset
310	EL Key Removed	Electronic Key Removed.	Set Electronic Key Correctly.	Reset Key
311	EL Key Changed	Electronic Key Was Replaced.	Attendant Reset.	Reset Key
312	EL Key CRC Error	CRC Error Detected.	Replace Electronic Key.	Reset Key
313	EL Key Data Lost	Electronic Key Data Lost.	Replace Electronic Key.	Reset Key
314	EL Key Type Error	Electronic Key Type Is Different.	Replace Electronic Key.	Reset Key
315	EL Key Error	Failed Communication.	Check Electronic Key. If Error Reoccurrs, Check Main Control PCB.	Reset Key
316	EL Key Error	Bus Error Detected.		Reset Key
317	EL Key Error	Alarm Detected.		Reset Key

© 2004 KONAMI GAMING

Communication Errors

COMMUNICATION				
Code	Screen Message	Description	Solution	Reset
400	COM Disconnect	Communication PCB Is Disconnected.	Connect Communic-ation PCB Correctly.	Auto
401	COM CPLD Error	Invalid CPLD On Communication PCB.	Replace Communic-ation PCB.	Auto
402	COM DPRAM Error	Dual Port RAM Access Error.	Replace Communic-ation PCB.	Auto
403	COM No Response	No Data Has Been Received From Communication PCB.	Reboot Machine. If Error Reoccurrs, Replace Communic-ation PCB.	Auto
404	COM Data Error	Received Data In Dual Port RAM Is Invalid.	Reboot Machine. If Error Reoccurrs, Replace Communic-ation PCB.	Auto
405	COM ROM Version	ROM Version Does Not Match.	Replace Invalid ROM.	Reset Key
406	COM RAM	RAM Access Error.	Reboot Machine. If Error Reoccurrs, Replace Communic-ation PCB.	Reset Key
407	COM ROM CRC	CRC Error In Program ROM On Communication PCB.	Replace Invalid ROM.	Reset Key
410	None	Communication PCB Resets Start.	No Action Required.	No
411	COM Host Timeout	Link Is Down Between Machine And External Host System.	Check Connection Port On Communic-ation PCB And External Host.	Auto

Touch Screen Errors

TOUCH SCREEN				
Code	Screen Message	Description	Solution	Reset
450	TS Connect Error	Connection Failed to Touch Screen Device.	Check Connection.	Auto
451	TS Initial Error	Device Initialization Error.	Reboot Machine.	Reset Key
452	TS Communica-tion Error	Communication Data Buffer Overflowed.	Check Touch Screen.	Auto
453	TS Communica-tion Error	Communication Error. (Unknown Command Received).		Auto
454	TS Communica-tion Error	Communication Error (Send Data Error).		Auto
455	TS Communica-tion Error	Communication Failed (Receive Data Error).		Auto
456	TS Controller Error	Touch Screen Controller Unable To Accept Communication Data.		Reset Key

CD ROM Errors

CD ROM				
Code	Screen Message	Description	Solution	Reset
480	CD ROM Read Error	CD ROM Read Error Occurred.	Check CD ROM. Check Media. Replace CD ROM And Or Media.	Reset Key
481	CD ROM Misc. Error	Communication Error.	Check CD ROM. Check Media. Replace CD ROM And Or Media.	Reset Key
482	CD ROM Validation Error	Validation Code Does Not Match.	Replace Invalid CD Media.	Reset Key
483	CD ROM Media Change	CD ROM Media Was Replaced.	Replace Invalid CD Media.	Auto

© 2004 KONAMI GAMING

Thermometer Errors

THERMOMETER				
Code	Screen Message	Description	Solution	Reset
500	Thermometer System Fail	Thermometer Device Malfunction.	Reboot Machine. If Error Reoccurrs, Check Main Control PCB.	Reset Key
501	Thermometer Error	Thermometer Device Malfunction.	Reboot Machine. If Error Reoccurrs, Check Main Control PCB.	Reset Key
502	Thermometer Data Error	Thermometer Device Malfunction.	Check Main Control PCB.	Reset Key
503	Device Overheat	Abnormal Temperature In Logic Box.	Turn Off Machine Until Cool.	Reset Key
504	Device Overheat		Turn Off Machine Until Cool.	Reset Key

Circuit Breaker Errors

CIRCUIT BREAKER				
Code	Screen Message	Description	Solution	Reset
600 601 602	24V DC Overload	Circuit Breaker Tripped On I/O Drive B PCB.	Check Candle, Diverter Or Handle Circuit.	Reset Key

Printer Errors

PRINTER				
Code	Screen Message	Description	Solution	Reset
700	Printer Disconnect	Printer Is Not Connected.	Check The Printer Connection.	Auto
701	Printer Off Line	Printer Is Off Line.	Reboot Machine. Check Printer.	Auto
702	Printer Paper Out	Printer Is Out Of Paper.	Load Paper.	Reset Key
703	Printer Jam	Printer Paper Is Jammed.	Clear Printer Jam.	Reset Key
704	Printer Communication Error	Received Data Is Not Valid.	Reboot Machine. Check Printer.	Reset Key
705	Printer Power Off Error	Printer Power Was Lost While Printing Ticket.	Attendant Reset.	Reset Key
706	Ticket Pay Error	Printer Power Was Lost While Printing Ticket. Attendant Has Reset Code 705.	To Reprint Ticket, Reset Attendant. To Cancel Print And Request Hand-Pay, Turn The Jackpot Key While Pressing ***Cash Ou***t.	Reset Key

ROM Version Errors

ROM VERSION				
Code	Screen Message	Description	Solution	Reset
810	ROM Version Errror	CRC Mismatch.	Replace Invalid Program ROM.	Reset Key

© 2004 KONAMI GAMING

RAM Errors

RAM				
Code	Screen Message	Description	Solution	Reset
821	Backup Data Error	Backup Data Error	All Clear RAM Procedure Required.	Reset Key
822	None	Backup Data Reset.	No Action Required.	No

EEPROM Errors

EEPROM				
Code	Screen Message	Description	Solution	Reset
830	EEPROM Data Lost	EEPROM Data Lost.	All Clear RAM Procedure Required.	Reset Key
831	EEPROM Error	EEPROM Read Check Error Detected.	Reboot Machine. Check Main Control PCB.	Reset Key
832	EEPROM Error	EEPROM Write Check Error Detected.	Reboot Machine. Check Main Control PCB.	Reset Key

Option Change Errors

OPTION CHANGE				
Code	Screen Message	Description	Solution	Reset
840	None	Option Changed.	No Action Required.	No

Low Battery Errors

LOW BATTERY VOLTAGE				
Code	Screen Message	Description	Solution	Reset
881	Low Battery Voltage (RTC)	RTC Backup Battery Voltage Drop.	Replace RTC Backup Battery.	Reset Key
882	Low Battery Voltage (NVMB0)	Non-Volatile Memory PCB0 Backup Battery Voltage Drop.	Replace Non-Volatile Memory PCB0 Backup Battery.	Reset Key
883	Low Battery Voltage (NVMB1)	Non-Volatile Memory PCB1 Backup Battery Voltage Drop.	Replace Non-Volatile Memory PCB1 Backup Battery.	Reset Key

Program Errors

PROGRAM ERROR				
Code	Screen Message	Description	Solution	Reset
890	Game Memory Corrupted	CRC Check Error Detected During Game.	Serious Problem Exists In Memory Device. Reseat NVMB0 &NVMB1. Replace NVMB0 &NVMB1.	Reset Key

Self Diagnostic On Boot Errors

SELF DIAGNOSTIC ON BOOT				
Code	Screen Message	Description	Solution	Reset
900	Work RAM Error	W/R Check Error.	Reseat NVMB0 &NVMB1. Replace NVMB0 &NVMB1.	No
901	Program ROM Error	CRC Check Error Detected.	Replace Invalid Program ROM.	No
902	Data ROM Error	CRC Check Error Detected.	Replace Invalid Data ROM.	No

© 2004 KONAMI GAMING

Self Diagnostic On Boot Errors (Cont.)

SELF DIAGNOSTIC ON BOOT				
Code	Screen Message	Description	Solution	Reset
905	MCTB Disconnect	Main Control PCB Disconnected.	Connect Main Control PCB.	No
906	IOAB Disconnect	I/O Drive A PCB Disconnected.	Connect I/O Drive A PCB And B.	No
907	IOBB Disconnect	I/O Drive B PCB Disconnected.	Connect I/O Drive B PCB.	No
908	GPEB Disconnect	General Purpose External PCB Disconnected.	Connect General Purpose External PCB.	No
909	COMB Disconnect	Communication PCB Disconnected.	Connect Communic-ation PCB.	No
910	MCTB CPLD Error	CPLD On Main Control PCB Disconnected.	Check Main Control PCB.	No
911	IOAB CPLD Error	CPLD On I/O Drive A PCB Disconnected.	Check I/O Drive A PCB And Backplane PCB.	No
912	IOBB CPLD Error	CPLD On I/O Drive B PCB Disconnected.	Check I/O Drive B PCB And Backplane PCB.	No
913	GPED CPLD Error	CPLD On General Purpose External PCB Error.	Check General Purpose External PCB And Backplane PCB.	No
914	COMB CPLD Error	CPLD On Communication PCB Error.	Check Communic-ation PCB And Backplane PCB.	No
915	Graphic RAM Error	W/R Check Error.	Check Main Control PCB.	No
921	NVMB0 Disconnect	Non Volatile Memory PCB0 Disconnected.	Insert Non Volatile Memory PCB0.	No

Self Diagnostic On Boot Errors (Cont.)

SELF DIAGNOSTIC ON BOOT				
Code	Screen Message	Description	Solution	Reset
922	NVMB1 Disconnect	Non Volatile Memory PCB1 Disconnected.	Insert Non Volatile Memory PCB1.	No
925	AC Monitor Fail	AC Monitor Failed.	Check AC Line (24V, 115V)	No
926	Backup RAM Error	W/R Check Error.	Check Main Control PCB.	No
927	Backup Data Cleared	Backup Data Was Cleared.	Change Electronic Key And Reboot.	No
928	Backup Data Error	Backup Data Error.	All Clear RAM Procedure Required.	No
930	EL Key Error	Electronic Key Error.	Replace Invalid Electronic Key.	No
931	EL Key Error-Progr-am ROM CRC	Electronic Key Does Not Match Program ROM.	Check Program ROM, Check EL Key.	No
932	EL Key Error-Data ROM CRC	Electronic Key Does Not Match Data ROM.	Check Data ROM, Check EL Key.	No
933	EL Key Removed	Electronic Key Removed.	Install EL Key.	No
934	EEPROM Error	EEPROM Error.	All Clear RAM Procedure Required.	No
935 936	Sound RAM Error	W/R Check Error.	Reseat Sound RAM. Replace Sound RAM.	No
937	Sound Data Error	CD ROM Device Failure Or Invalid Media Inserted.	Check CD ROM Device. Check Media.	No
940	CD ROM Error	CD ROM Device Failure Or Invalid Media Inserted.	Check CD ROM Device. Check Media.	No

© 2004 KONAMI GAMING

CPU Exception Errors

CPU EXCEPTION ERROR				
Code	Screen Message	Description	Solution	Reset
950	Critical Interrupt Pin Exception	AC Monitor Failed	Check AC Line (24V, 115V)	No
951	Machine Check Exception	Bus Error, Non-Configured Memory Error, Bank Protection Violation Or Timeout Occurred.	Replace Main Control PCB.	No
952	Data Storage Exception	Data Storage Exception Occurred.	Replace Main Control PCB.	No
953	Instruction Storage Exception	Instruction Storage Exception Occurred.	Replace Main Control PCB.	No
954	External Interrupt Exception	Undefined External Interrupt Exception Occurred.	Replace Main Control PCB.	No
955	Alignment Exception	Alignment Exception Occurred.	Replace Main Control PCB.	No
956	Program Exception	Illegal Instruction, Trap Instruction, Or Privileged Instruction In Problem State Occurred.	Replace Main Control PCB.	No
957	System Call Exception	System Call Instruction Executed.	Replace Main Control PCB.	No
958	Programma-ble Interval Timer Exception	CPU Or WORK RAM Malfunction.	Replace Main Control PCB.	No
959	Fixed Interval Timer Exception	Fixed Interval Timer Interrupt Occurred.	Replace Main Control PCB.	No
960	Watchdog Timer Exception	Timeout Of The Watchdog Occurred.	Replace Main Control PCB.	No
961	Data TLB Miss Exception	Data TLB Miss Exception Occurred.	Replace Main Control PCB.	No

CPU Exception Errors (Cont.)

CPU EXCEPTION ERROR				
Code	Screen Message	Description	Solution	Reset
962	Instruction TLB Miss Exception	Instruction TLB Miss Exception Occurred.	Replace Main Control PCB.	No
963	Debug Exception	Debug Exception Occurred.	Replace Main Control PCB.	No

Door Errors

DOOR ERRORS				
Code	Screen Message	Description	Solution	Reset
980	Main Door Accessed	Main Door Was Opened During Power Off.	Cleared By Attendant Reset.	Reset Key
981	Drop Door Accessed	Drop Door Was Opened During Power Off.	Cleared By Attendant Reset.	Reset Key
982	Logic Door Accessed	Logic Door Was Opened During Power Off.	Cleared By Attendant Reset.	Reset Key
983	Sub Door Accessed	Sub Door Was Opened During Power Off.	Cleared By Attendant Reset.	Reset Key
984	Bill Door Accessed	Bill Door Was Opened During Power Off.	Cleared By Attendant Reset.	Reset Key
985	Logic Door Port	Logic Door Register Writing Error Detected.	Check Door Sensors And Door Sensor Cables.	Reset Key
986	Main Door Port	Main Door Register Writing Error Detected.	Check Door Sensors And Door Sensor Cables.	Reset Key
987	Bill Door Port	Bill Door Register Writing Error Detected.	Check Door Sensors And Door Sensor Cables.	Reset Key
988	Drop Door Port	Drop Door Register Writing Error Detected.	Check Door Sensors And Door Sensor Cables.	Reset Key

© 2004 KONAMI GAMING

Door Errors (Cont.)

DOOR ERRORS				
Code	Screen Message	Description	Solution	Reset
989	Sub Door Port	Sub Door Register Writing Error Detected.	Check Door Sensors And Door Sensor Cables.	Reset Key
990	Maintenance Door Accessed	Maintenance Door Was Opened During Power Off.	Cleared By Attendant Reset.	Reset Key
991	Fill Box Door Accessed	Fill Box Door Was Opened During Power Off.	Cleared By Attendant Reset.	Reset Key
992	Maintenance Door Port	Maintenance Door Register Writing Error Detected.	Check Door Sensors And Door Sensor Cables.	Reset Key
993	Fill Box Door Port	Fill Box Doorr Register Writing Error Detected.	Check Door Sensors And Door Sensor Cables.	Reset Key

Suspended Operation

Jackpot Reset

If a single jackpot is won above the ultimate full lock-up amount, and an 080 attendant pay error is displayed, the game is suspended. Insert the key into the reset key switch and turn it 90° clockwise after paying the jackpot to return to the ordinary game.

Attendant Pay

When the number of coins to be paid is more than the number of coins set (Partial Pay Coins) for the “attendant pay”, the game is suspended and an 080 attendant pay error is displayed. Insert the key into the reset key switch and turn it 90° clockwise after the attendant pay to return to the ordinary game. You can set the number of coins the attendant pays in the Audit mode.

Error Message in Display

If an error message appears on the screen, the game is suspended until you recover from the error. If the error message is left on the screen and you cannot restart the game even though you have recovered from the error, insert the key into the Reset key switch and turn it 90° clockwise to return to the ordinary game.

Coin Jamming

Open the main door and check the location the coins are jammed.

When the Coins are Jammed in the Coin Acceptor:

Open the main door. Remove the harness from the coin acceptor. Grasp the coin acceptor firmly, and pull from the plastic mounts.

Refer to the coin acceptor instruction manual provided by the manufacturer for more information.

Install the coin acceptor into the coin track unit. Connect the connector to the coin acceptor. Close the main door.

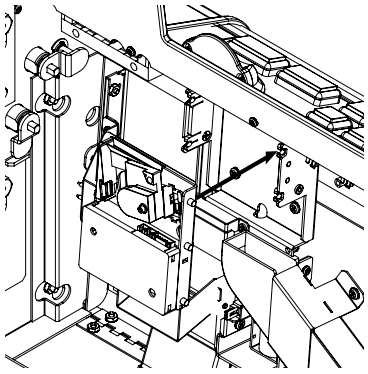

When the Coins are Jammed in the Coin Track Unit:

Open the main door. Remove the connector from the coin acceptor. Gently pull the coin acceptor from the coin track unit.

Remove the connector of the wire harness from the coin track unit. Remove the five 8-32 X 1/4” screws to remove the coin track unit. Remove the coins jammed in the coin track unit. Install the coin track unit using the five 8-32 X 1/4” screws Connect the wire harness to the coin track unit. Install the coin acceptor in the coin track unit. Install the connector in the coin acceptor.

Close the main door.

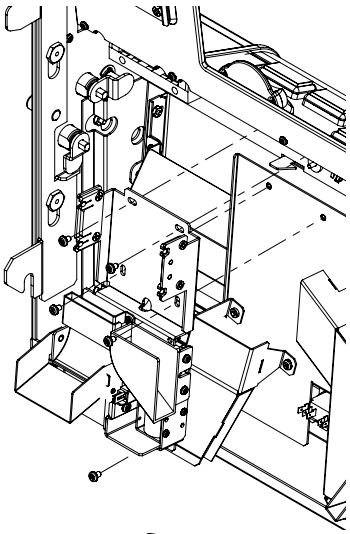

Installing a Sample Coin (Coin Mech)

Viewing the coin mech from the front, slide the sensor coil to the right. Place the sample coin into position and release the sensor coil. In most cases, the sample coin will seat properly. If coins are not accepted, repeat procedure.

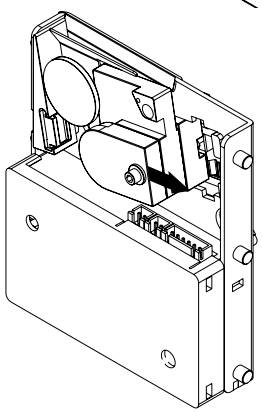

 © 2004 KONAMI GAMING

Adjusting the Coin Comparitor (Coin Mech)

Selectivity of the coin comparitor can be adjusted for sensitivity. To set the optimum sensitivity, adjust the potentiometer clock-wise until a high quality slug is rejected. Test sensitivity using regular coins. Repeat as necessary.

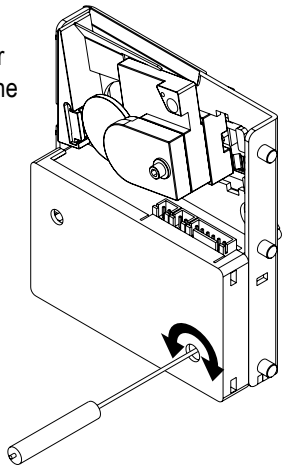

Coin Learn Procedure (IDX)

The IDX Xeptor is designed to accept multiple denominations as determined by the Operator. Follow the steps below to program the Xeptor for the coins required.

Lift the cover by pushing up on the bottom right corner of the plastic cover. With a small screwdriver, turn the rotary switch to position 1 through 6 (the denomination option positions). The LED turns red, indicating the Xeptor is in learn mode. Press the button once for each credit to be issued per coin. For a single denomination, one credit per coin is standard. For multiple denominations, the number of credits is divided by the lowest incremental rate (i.e. a dollar will require 4 credits if the machine also accepts quarters (1 quarter=1credit, $1=4credits).

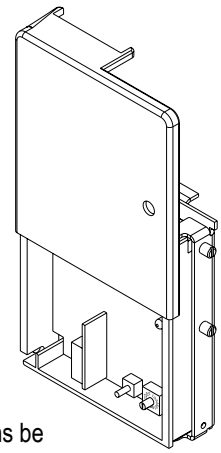

Slide the cover down to close the Xeptor. Deposit (6) samples of the required coin. It is recommended that six different coins be used to ensure a wider sampling of examples to be examined.

Slide the cove open. Turn the rotary switch to the “0” position. The LED turns green to indicate the Xeptor is functional. Repeat for all necessary denominations.

Teach and Run Procedure (Condor)

The Condor Acceptor uses a teach and run programming method. Follow these steps to program the Condor for the required coins.

With a small screwdriver, turn the rotary switch from position “0” to position 1 through 6 (the denomination option positions). Press the programming button. The LED turns red, indicating the Condor is in learn mode. Deposit samples of the required coin. It is recommended that different coins be used to ensure a wider sampling of examples to be examined. The LED will flash green (this usually happens after four coins). Press the programming button again.

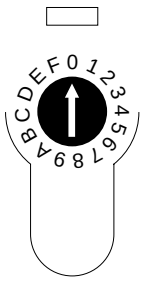

The LED will return to green. Turn the rotary switch back to the “0” position. The Condor is now ready to accept coins.

© 2004 KONAMI GAMING

THIS PAGE INTENTIONALLY LEFT BLANK

© 2004 KONAMI GAMING

Module 5

5

Preventative Maintenance

Overview

WARNING: Power to the machine must be turned off prior to cleaning the inside of the machine or removing any mechanical or electrical assembly. Unplug the machine.

This module describes preventative maintenance inspections, adjustments, and cleaning schedules for major assemblies found in Konami Gaming, Inc. machines. Assemblies not covered in this module, may be covered in specific jurisdiction or market modules obtainable from your Konami Gaming, Inc. distributor or customer service representative. The following procedures are recommended to ensure reliability and continuous operation of the machine. Assemblies covered in this module are:

- Hopper
- Coin Acceptor
- Coin Diverter
- WBA Bill Acceptor
- LCD Assembly
- CPU Assembly
- Cabinet
- Deck Buttons

Periodic inspection and maintenance which should be performed least every three months:

- Vacuum the inside of the cabinet and remove all dust and debris from the coin chutes, hopper and CPU housing.
- Clean the LCD screen with an antistatic nonabrasive cloth.
- Wipe down cabinet exterior. Clean buttons and face plate. Clean display, belly and feature glass.
- Remove all loose coins from inside the machine.
- Replace burned out lamps and bulbs.
- Clean bill acceptor validator module optics and cash cassette rollers.

Periodic inspection and maintenance which should be performed at least every twelve months:

- Clean and test the bill acceptor.
- Clean coin optics and remove all dust from the CPU PCB.
- Inspect hopper knife and agitator for wear.
- Adjust coin acceptor.
- Check alignment of bill acceptor head and door. Adjust for proper fit.
- Check wiring for frayed, cracked, or pinched insulation.

Periodic inspection and maintenance which should be performed at least every twenty-four months:

- Replace PCB batteries.

Hopper

Overview

The major components of the hopper are: an DC motor which turns a pin wheel to pay out coins or tokens, an optic sensor to count coins or tokens during a payout, and an adjustable coin-level probe which informs the machine's CPU when coins or tokens should be routed from the hopper to the coin drop bucket.

Removal

Unlock and open the main cabinet door. Turn machine power off. Slide the hopper forward and out of the cabinet.

Inspection (90 Day Interval)

Empty all coins or tokens from the hopper bowl. Inspect the hopper bowl for cracks or breaks. Inspect the hopper optic sensor for clean surfaces and damage. Verify the optic sensor is securely mounted. Inspect the hopper knife and rubber agitator for wear. Replace if needed. Confirm the hopper knife is secure and correctly positioned. Confirm the coin-level probe is secure. Confirm the spring screws securing the coin bowl to the hopper body are tight.

Cleaning (90 Day Interval)

Locate and remove the optic sensor. Use a cotton swab soaked in isopropyl alcohol to clean the sensor. Wipe dry with a lint free cloth. Wipe any dust out of the hopper coin bowl with a clean cloth.

Lubrication

Hoppers do not require lubrication. The gear box and motor are factory sealed units.

Adjust Hopper Knife (180 Day Interval)

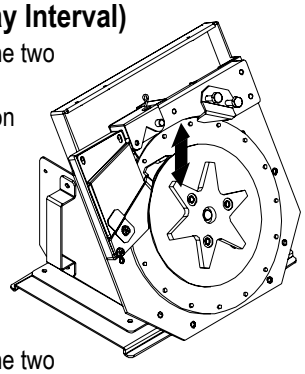

Loosen, but do not remove, the two screws securing the knife to the mounting plate. Gently press down on the knife until it lightly rests on the shelf wheel. Tighten the mounting screws until the knife is secure.

Adjust Hopper Coin Out Sensor (180 Day Interval)

Loosen, but do not remove, the two screws securing the sensor bracket to the mounting plate. Align the bracket so the sensor is centered on the roller count arm. Tighten the mounting screws until the bracket is secure.

© 2004 KONAMI GAMING

Set Hopper Coin-Level Probe Circuit (As Required)

Fill the hopper with the desired number of coins or tokens. The coins or tokens should be level with, or slightly below, one of the holes located on the side of the coin bowl. Gently shake the coin bowl to settle the coins. Insert and secure a probe into a hole which is level with (or just above) the amount of coins or tokens in the bowl . This sets the coin-level. When the coin or token level drops below the probe, the coin diverter routes inserted coins or tokens to the hopper. Level one is the lowest hole on the bowl.

Coin Acceptor

Overview

The MC-40 coin acceptor positions a sample coin in a magnetic field. Coins inserted through the coin head are compared to this field. Those favorably matching the field are accepted. All other coins are rejected.

Removal

Unlock and open the main door. Turn machine power off. Unplug the six pin wire harness connector located on the right side of the acceptor. Gently pull the acceptor from the mounting clip, and lift the acceptor out and away from the mounting coin handling assembly.

Inspection (90 Day Interval)

Inspect the coin path for foreign objects, film, or debris. Verify all coin acceptor bracket mounting screws are secure and tight. MC-40: Check the damper lever for free movement and the correct weight is present and secure (see the following table for correct weight assemblies). Check the sample coin sliding sensor coil for unrestricted spring movement.

Coin Weight Range (in grams)	Typical Coin Used	Damper Weight Assembly	Weight	Weight Part Numbers	Mounting Screw
1.5 to 1.9	Small Coins/Tokens	06660024	No Weight	Not Required	Not Required
2.0 to 2.9	1¢, 10¢	06660051	0.7 grams	040600005-01	Not Required
3.0 to 4.4	5¢, 25¢	06660012	2.6 grams	04060038-01	Not Required
4.5 to 5.0	Canadian 25¢	06660101	4.0 grams	04060084-02	Not Required
5.0 to 8.5	25¢, Token	06660013	6.0 grams	04060039-01	Not Required
8.5 to 10.0	Canadian $1	06660102	9.0 grams	04060083-2	P-166-6-10
10.0 to 10.5	Special Coins	06660056	10.6 grams	04060081-02	P-166-6-10
10.5 to 11.0	Australian Dollar	06660046	12.0 grams	04060080-02	P-166-6-10
11.0 and Up	50¢, $ Game Tokens	06660014	14.2 grams	04060040-01	P-166-6-12
11.0 and Up	1.47" and up (dia. only)	06660076	14.2 grams	04060040-01	P-166-6-12

Coin Diverter

Overview

The coin diverter, located below the coin acceptor, consists of a solenoid linked to a diverter plate. Coins inserted through the coin head are routed to the hopper bowl. When the hopper reaches an Operator set coin capacity the CPU energizes the diverter solenoid. Subsequent coins or tokens inserted are then routed to the drop bucket inside the stand.

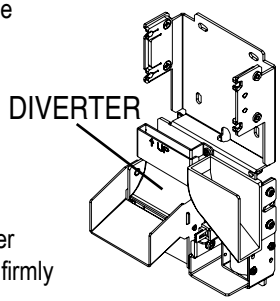

Inspection (90 Day Interval)

Inspect the coin diverter plate for foreign materials. Clean the diverter plate using a cotton swab soaked in isopropyl alcohol. Tighten all mounting screws/nuts. Verify the diverter plate freely moves. Verify wire lugs are firmly attached to the solenoid terminals.

Bill Acceptor

Overview

The bill acceptor consists of the bill validator module, transfer unit, and the bill stacker assembly. The bill acceptor validates, either accepting or rejecting bills or coupons in various denominations. Accepted bills or coupons are transferred to the bill stacker, and an appropriate number of credits register on the credit meter. For example, an accepted U.S.A. $1.00 bill shows as four credits on a 25¢ machine. Rejected bills are returned to the Player.

Inspection (90 Day Interval)

Inspect the bill acceptor wire harness for frayed or cracked wires and verify all wire connectors are firmly seated. Inspect the bill entrance for foreign material. Inspect the labels for peeling or torn edges. Replace as necessary.

Removing/Opening the Validator Head & Transport Unit

Unlock and open the bill acceptor access door. Pull down on the transport unit locking handle. Carefully slide the validator head/ transport assembly out of the bill validator chassis.

Validator Module

Unlock and open the bill acceptor access door. Pull down on the validator head locking bar. Carefully slide the validator away from the transport unit. Remove the validator module from the machine.

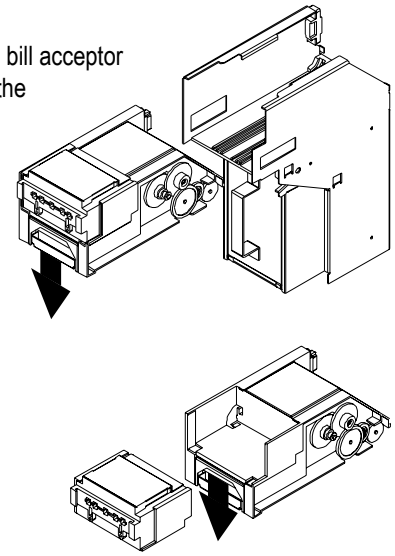

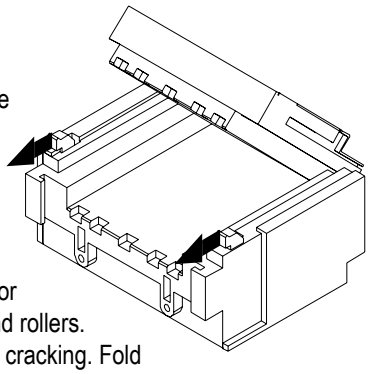

Firmly grasp the module in one hand, and pull forward on the module cover locking tabs. Rotate the module cover up, exposing the rollers and optics.

Remove any lint, dust, or paper debris from the belts and rollers. Inspect the belts for fraying or cracking. Fold the module top down, then latch it in place with the locking lever.

LCD Assembly

Overview

An LCD is a device which accepts video signals from the machine's CPU and displays graphics (like cards or reels) and game information (like credits or coins won). The monitor consists of a LCD (Liquid Crystal Display) screen which is backlit. Images are formed by control of the color and opacity of the LCD display.

Inspection (90 Day Interval)

With the main door closed and machine power turned on, visually check the LCD picture for color, contrast, and brightness. Check for discoloration or fadeout at the center and edges of the screen. Check video display for correct horizontal and vertical alignment. Make sure all letters, words, and images are clearly visible within the borders of the LCD bezel. Unlock and open the main door. Inspect the LCD screen surface for chips or cracks. Immediately discontinue use of a cracked or chipped LCD screen and replace it.

Cleaning (90 Day Interval)

Gently wipe the LCD surface with an antistatic nonabrasive cloth.

LCD Controls (Overview)

The LCD controls are located on the top back of the LCD. The controls can be accessed by opening the main door. These controls allow the Operator to adjust the horizontal size, horizontal position, vertical size, vertical position and the brightness (GAIN).

WARNING: Hazardous HIGH VOLTAGE exists within the LCD. Use extreme caution when adjusting the LCD. Only **QUALIFIED PERSONNEL** should adjust the LCD.

OSD Adjustment

Use the OSD controls to adjust the display.

AUTO	Auto adjust the LCD.
DOWN	Decrease the setting or shift left.
UP	Increase the setting or shift right.
MENU	Displays the options for adjustment.
POWER	Turns the main board on or off.
LED	GREEN:Normal Operation. RED or AMBER:Power saving mode.

The following items can be adjusted using the OSD menu:

CONTRAST

BRIGHTNESS

HORIZONTAL POSITION

HORIZONTAL SIZE

PHASE

AUTO LEVEL

COLOR

TEXT/MOVIE

OSD POSITION

OSD TIMEOUT

POWER SAVE DELAY

LANGUAGE

INFORMATION

Calibrate Touch Screen (180 Day Interval)

Access the DIAGNOSTIC sub-menu. Select the Calibrate Touch Screen icon.

Touching the center of the circle in the corner performs the automatic location calibration of the touch screen. Any button returns to the previous menu.

CPU/CDROM Assemblies

Overview

The CPU/CDROM assembly contains the main electronic components (main microprocessor, game Compact Flash and RAM ICs) which control machine operations. Discharge body static BEFORE handling the CPU/CDROM assemblies to avoid damaging electro-static sensitive parts.

Cleaning (180 Day Interval)

Unlock and open the CPU enclosure door. Remove the board from the assembly. Carefully remove dust and debris with low pressure (15 psi or less) compressed air. Close and lock the CPU enclosure.

© 2004 KONAMI GAMING

Cabinet
Inspection (90 Day Interval)

Remove all loose coins from inside the cabinet, and vacuum out dust and debris. Check door alignment and adjust as necessary. Check all labels for peeling or cracking and replace if needed. Replace burned out lamps. Verify the candle lights when required. Check wire harness for frayed, cracked, or pinched wiring.

Buttons
Overview

The deck buttons are electromechanical switches the Player uses to interact with the machine. The buttons illuminate whenever their function is ready for use. Buttons consist of a plastic switch body, backing frame, legend plate, clear legend lens cap, microswitch, LED, and a spring.

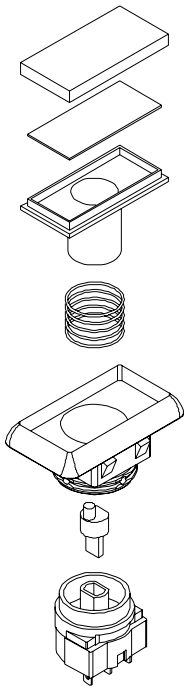

Inspection (90 Day Interval)

Inspect the legend lens cap for appearance and proper seating into the switch body. Verify the button freely moves and does not bind by repeatedly pressing down on the legend lens cap, both in the center and around the edges. Verify the switch is firmly mounted. Verify the microswitch is correctly positioned. Verify all electrical plugs are firmly connected.

System Battery
Overview

The system battery supplies power to the CPU PCB when machine power is turned off. Without the system battery, all data stored in RAM would be lost (accounting record and Operator set configurations for example) if power was unexpectedly lost. Before replacing the battery, record accounting records and game configuration settings.

Replace System Battery (24 Month Interval)
Changing the Batteries

WARNING: The improper changing of the battery may cause a loss of data. After changing the battery, you may need to change the EL-key and initialize the system.

The MCTB is equipped with one battery and the MVMB on the MCTB is equipped with two batteries (one per memory module).

Removal

Open the logic door and remove the MCTB. Remove the coin-style battery by inserting a small screwdriver under the battery and gently twisting or prying the unencased side up.

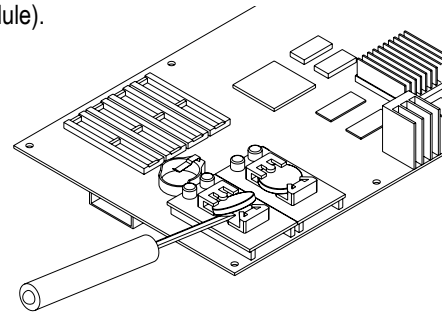

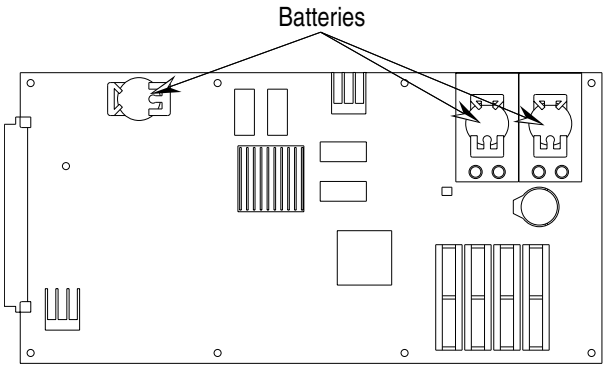

BATTERY SPECIFICATION				
Model	Nominal Voltage (V)	Nominal Capacity (mAh)	Dimensions	Discharge Current
CR2032	3	220	Positive terminal side f20.0. Negative terminal side f17.1. Thickness 3.2.	0.02

NOTE: Batteries can be ordered from the Konami customer service department using part number 490007.

Installation

The coin style battery has polarity. Insert the battery into the battery holder with the positive terminal side up. Snap in the battery with a light pressure. The battery is a CR2032 (JIS) or equivalent. Make sure that the battery is inserted into the battery holder with the positive terminal side up.

© 2004 KONAMI GAMING

Module 6

Wiring Diagrams

This Module contains the wiring diagram for the K2V 1.5 Upright Video.

 © 2004 KONAMI GAMING

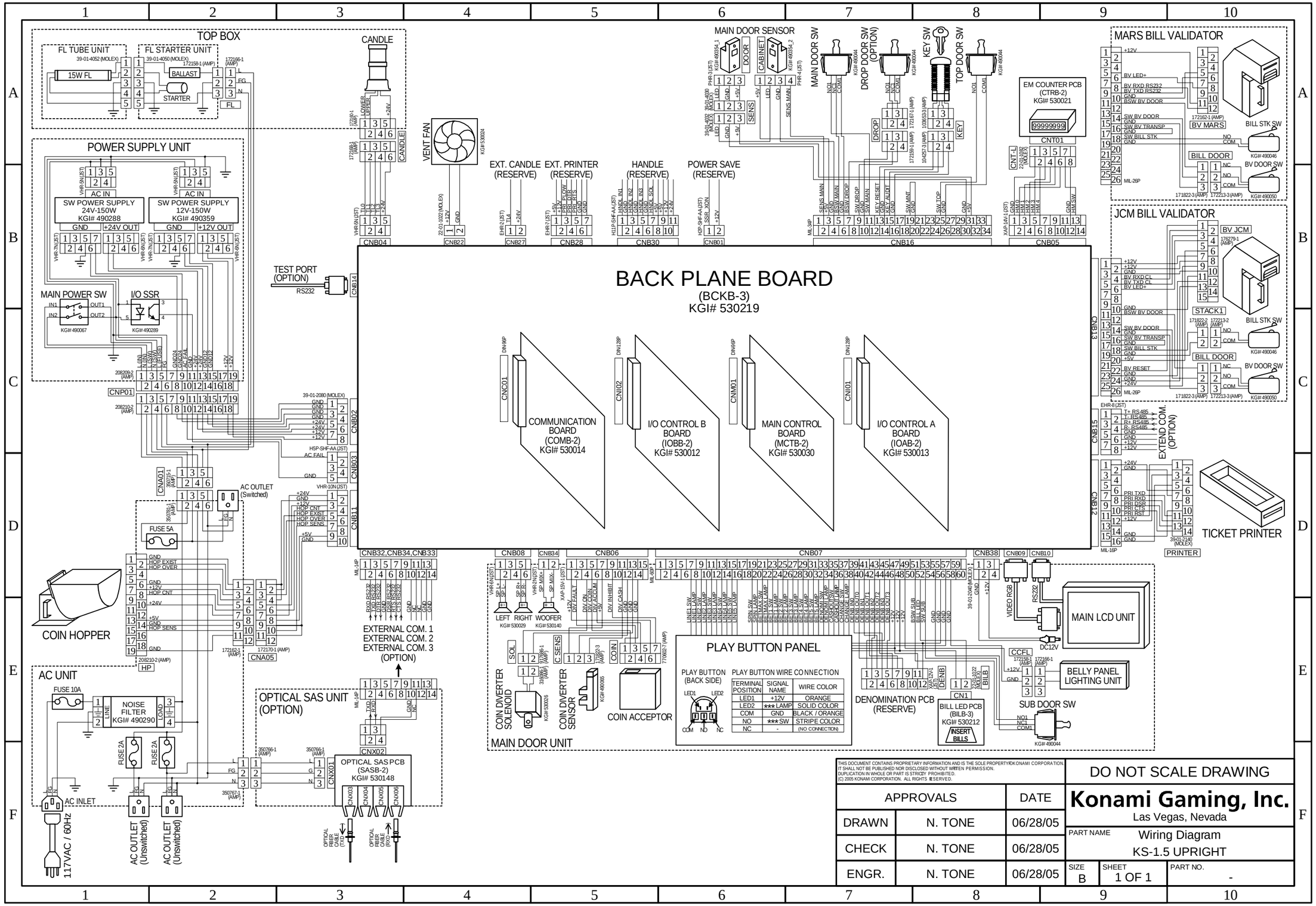

THIS DOCUMENT CONTAINS PROPRIETARY INFORMATION AND IS THE SOLE PROPERTY OF KONAMI CORPORATION. IT SHALL NOT BE PUBLISHED NOR DISCLOSED WITHOUT WRITTEN PERMISSION. DUPLICATION IN WHOLE OR PART IS STRICTLY PROHIBITED. (C) 2005 KONAMI CORPORATION. ALL RIGHTS RESERVED.

DO NOT SCALE DRAWING

APPROVALS		DATE
DRAWN	N. TONE	06/28/05
CHECK	N. TONE	06/28/05
ENGR.	N. TONE	06/28/05

Konami Gaming, Inc.
Las Vegas, Nevada

PART NAME: Wiring Diagram KS-1.5 UPRIGHT

SIZE	SHEET	PART NO.
B	1 OF 1	-

Module 7

Glossary & Index

7

Overview

This Index contains the definition of specialized terms. These terms and definitions assist the Operator's understanding of various machine functions and game operations.

A

All Reset
Clears the contents of the backup memory such as the credit, software meter, and game log and initializes the setting of the machine.

Audit Key Switch
Keyswitch located on the right side of the machine, used to access the audit menu.

Audit Meters
General and detailed meters tracking coin in, out, attendant pay and bill information.

B

Backboard (BCKB-3)
PCB located in the back of the logic unit housing.

Bill Entry
The plastic bezel that guides the bill from the front of the machine into the bill validator.

Bill Meters
Internal meters that track bills data.

Bill Stacker Door Lock
Lock on the door of the bill validator restricting access to the stacked bills.

Bill Stacker Door Switch
Security switch activates when bill stacker door is opened.

Bill Stacker Switch
Security switch that activates when stacker is removed.

Bill Validator Unit (WBA 13-SS/JCM)
Unit that accepts valid currency while rejecting invalid bills.

Bolster
Armrest

B-top
Intermediate top box.

B-top Artwork
Printed or silk-screened glass that is attached to the top box door and backlit to show game features or paytables.

B-top FL Unit
Upper fluorescent assembly that illuminates the B-top Artwork.

C

Cabinet Speaker
Speaker mounted inside the machine cabinet.

Candle
Light mounted on the top of the machine, used to display errors, jackpots or other conditions.

Cash Ticket Log
Displays the history of cash ticket that occurred recently (ticket #, date & time, $ amount of ticket paid, status and validation).

Cashout Log
Displays the history of cashout that occurred recently (date & time and amount).

Clock
Internal timing device used to track date, time and year of events.

Coin acceptor
Device to identify coins.

Coin drop sensor
Sensor to detect reverse coin movement (inactive in this model)

Coin Entry
The location on the main door where coins are inserted into the machine.

Coin Hopper
Motor driven device used to return coins to the player.

Coin Track Unit
Name of the coin traveling path.

© 2004 KONAMI GAMING

Coin Tray
Enclosure on the bottom of the main door used to catch and hold coins paid from the hopper.

Control Panel Unit
Panel with play button.

Controller
The touch screen controller.

Counter PCB
PCB holding the EM meters.

Counter Unit
Assembly consisting of the counter PCB and the housing, light and harness.

D

Dashboard
The dashboard displays the game status information, attendant message, game instruction, Denomination sign, and other meters.

DC Fan
12VDC cooling fan.

Door Connector PCB
PCB located on the inside of the main door close to the cabinet. It is the main hub for all door connections (buttons, coin comparitor).

Door Lock Sensor
Sensor used to determine the position of the door lock cam or door lock.

Drop Box Switch
Switch used to determine when the drop door has been opened.

E

EL Key
The I-button that triggers a verification of checksums for the CD-ROM and the main program chip to see that they match.

EM Counter
Electro-mechanical counter (meter).

Event
An occurrence that is tracked by the soft meters for display in an event log.

Event Log
Checks a list of the dates and times and the factors of Events that occurred recently.

Event Meter
Checks cumulative number and the latest occurrence date and time of errors by the factor.

F

Function Button
Buttons attached to the monitor mask on the left side of the game (usually Cash Out, Pay Table and Help).

Function Button Panel
The assembly holding the function buttons.

G

Game Area
The game area displays image that corresponds to game type.

Game Screen
Game screen is composed of four areas, which are game area, sub game area, sub message area and dashboard.

H

No entry

I

I/O Test
Input/output test.

J

JP Reset
Jackpot reset.

Jumper Sockets
Sockets on a PCB allowing multiple settings by changing the configuration of shorting connector.

K

Key Switch
An electro-mechanical switch activated by using a key.

KMS
KONAMI Maintenance System

© 2004 KONAMI GAMING

L

LED PCB
PCB to control LED of bill acceptor.

Logic Door Lock
Lock used to secure the logic door.

Logic Door Switch
Switch used to monitor the logic door position (opened or closed).

M

Machine Type
Series name of the cabinet. KGI Ver. 1.5 for this cabinet.

Main Door
The front door of the machine holding the player button panel, function button panel and the coin head.

Main Door Switch
The switch monitoring the position of the main door (opened or closed).

Manufacture Date
Date the machine was manufactured.

Menu
The display structure for Software meters, Game recall meters, Event meters, Option meters, Diagnostic meters, Clock & misc. meters, and Print audit information.

Monitor Mask
Panel to make the screen easy to see by blocking any light from the inside.

N

No entry

O

Operation buttons
Buttons used to navigate the menu systems.

Out of Service
An operator induced setting allowing no game play until reset.

P

Play Button Panel
The button panel holding the player buttons (Bet 1, Play 5 Lines).

Power Supply Unit
The assembly on the right side of the cabinet next to the hopper holding the power supply.

Power Switch Unit
The assembly next to the monitor holding the power switch.

Q

No entry

R

RAM
Random access memory.

RNG Test
Inspects the on-board RNG (Random Number Generator).

ROM
Read only memory.

Reset-Key
A keyswitch used to clear error messages, jackpots or attendant pays. Returns the machine to game play mode.

R-Top
Round top.

R-Top Lock
Round Top door lock. Used to secure the door to to the top box.

S

SAS Board
Slot Accounting System I/F PCB.

Serial Number
A unique number used to identify a particular machine.

Serial Number Plate
Plate attached to side of machine with serial number, manufacturers date, and machine type stamped on.

© 2004 KONAMI GAMING

SNS PCB
PCB mounting the sensor to detect reverse coin movement

Software Meters
Internal meters used to track money movement, events and errors.

Sub Game Area
The Sub Game area displays the game title and featured game image.

Sub-Door
The door mounted to the bottom of the main door. Allows access to the bill validator stacker assembly.

Sub-Door artwork
Sub-door glass panel painted with the game design.

Sub-Door Shadow Unit
Controls the light in the sub-door.

Sub-door switch
Switch to sense sub-door opening or closing.

Sub-Message Area
The sub-message area displays the online commercial message or another information message.

T

Top Box
The upper enclosure mounted to the top of the cabinet.

Top Box Lock
A lock to secure the top box door.

Touch Screen
A cover over the monitor display allowing pressing of certain areas on the screen to act as buttons.

Transformer Unit
Step down transformer mounted on the bottom of cabinet. Used when available voltage is 220VAC.

U

UART
Universal Asynchronous Receiver Transmitter.

V

Video Monitor Unit
17” RGB CRT used to display game information.

W

No entry

X

No entry

Y

No entry

Z

No entry

© 2004 KONAMI GAMING

A

Adjust Hopper Knife 5-123
Adjust Hopper Sensor 5-123
All Reset 2-13
Attendant Pay 4-120
Attendant Pay Codes 4-112
Audit Meters 2-18, 2-19, 2-20, 2-21, 2-22
AUDIT MODE 2-17

B

Backplane Board (BCKB) 93
Backup Memory 2-13
Battery 5-126
Belly Glass 94
Bet X Per Line Buttons 2-16
Bill Acceptor 5-124
Bill Meters 2-21
Bill Validator 2-73, 92
Bill Validator (Bill Entry) 2-16
Bill Validator Door (Sub Door Open) 2-9
Bill Validator Door Lock 2-12
Bill Validator Errors 4-113
Bill Validator Option-Accept Bill $1 2-30
Bill Validator Option-Accept Bill $100 2-32
Bill Validator Option-Accept Bill $2 2-31, 2-32, 2-33
Bill Validator Option-Accept Bill $20 2-31
Bill Validator Option-Accept Bill $5 2-31
Bill Validator Option-Accept Bill $50 2-32
Bill Validator Option-Accept Bill $500 2-32
Bill Validator Option-Redeem Voucher 2-32, 2-33
Bill Validator Options 2-30
Buttons 5-126

C

Cabinet 5-126
Cabinet Specifications 2-5
Candle 2-6
Candle Pin 2-6
Candle Pin Assignment 2-6
Cash Ticket Log 2-23
Cashout Button 2-16
Cashout Log 2-22
CD ROM Errors 4-115
Change Button 2-16
Charges, Shipping 3
Check 2-6
Circuit Breaker Errors 4-116
Clearing the Backup Memory 2-13
Coin Acceptor 2-12, 5-124
Coin Acceptor Options 2-29
Coin Acceptor Sample Coin 2-12
Coin Acceptor/Diverter Errors 4-112
Coin Head 2-16
Collecting Bills 2-17
Collecting Coins 2-17
Common Operation switches 2-18
Commonly-Used Hardware 90
Communication Errors 4-115
Communication Board (COMB) 93
Controller ID 2-69
CPU Exception Errors 4-119
CPU/CDROM Assemblies 5-125
CUL 2-8

D

DASHBOARD 2-14
Date of Publication 6-127
DCNB (Door Connector PCB) Errors 4-114
Diagnostic 2-67
Diagnostic-Bill Validator 2-74
Diagnostic-CD-ROM Drive 2-76
Diagnostic-Coin Diverter-To Coin Drop/Hopper 2-73
Diagnostic-Coin Hopper 2-74
Diagnostic-Communication Information 2-79
Diagnostic-Demonstration Print 2-75
Diagnostic-Game Test 2-79
Diagnostic-Game Test-Bet Per Line 2-81
Diagnostic-Game Test-Reel 1 Position 2-80
Diagnostic-Game Test-Reel 2 Position 2-80
Diagnostic-Game Test-Reel 3 Position 2-80
Diagnostic-Game Test-Reel 4 Position 2-80
Diagnostic-Game Test-Reel 5 Position 2-81
Diagnostic-Game Test-Total Line 2-81
Diagnostic-I/O Test Extras 2-81
Diagnostic-I/O Test Extras-EM Counter 2-82
Diagnostic-I/O Test Extras-Option In-Port 2-83
Diagnostic-I/O Test Extras-Option Out-Port 2-84
Diagnostic-I/O Test Extras-UART 2-82
Diagnostic-In-Port 2-71
Diagnostic-Main Menu 2-67
Diagnostic-Now Printing 2-76
Diagnostic-Screen 2-78
Diagnostic-Screen-Color Bar Screen 2-78
Diagnostic-Screen-Crosshatch Screen 2-78
Diagnostic-Sound-Sound Code 2-77
Diagnostic-Sound-Sound Volume 2-77
Diagnostic-Successful Print 2-76
Diagnostic-System Information 2-67, 2-68
Diagnostic-System Information-Game Information 2-68
Diagnostic-System Information-ROM Information 2-68
Diagnostic-Ticket Printer 2-75
Diagnostic-Touch Screen 2-69
Diagnostic-Touch Screen-Controller ID 2-69

 © 2004 KONAMI GAMING

Door Errors 4-119, 4-120
Door Status Errors 4-111
Doors 2-9
Drop box Switch 2-6
Drop Box Switch Pin Assignment 2-7

E

EEPROM Errors 4-117
EL (Electronic Key) Errors 4-114
Electromechanical Meter Errors 4-113
EM Counter 2-82, 2-83
Error Message in Display 4-120
Event Log 2-27

F

Failed Demonstration Print 2-76
FCC 1
Features 2
Features, Hardware 2
Fiber Optic 2-7
from, Recovering Error 2-14
from, Returning the KMS 2-14
FUNCTIONAL OVERVIEW 90

G

Game 2
Game Meters 2-24, 2-25, 2-26
Game Recall 2-26, 2-27
Game Screen 2-14

H

HELP 2-15
HELP and PAY TABLE 2-15
Hopper 5-123
Hopper Errors 4-112
Hopper Level Probe 2-12
How to Enter and Exit Audit Mode 2-17
HZ 2-9

I

I/O Drive A Board (IOAB) 2-86
I/O Drive A Board (IOAB-2)JP2, JP3 and JP4: 2-86
I/O Drive B Board (IOBB) 92
I/O Drive B Board (IOBB-2)JP1 2-87
In-Port 2-71
In-Port (Button/Mechanical Switch Test) 2-71
Information, RMA 1
Initialization 2-8
Inspection 2-13
INSTALLATION 2-8
Installation 2-8
Interface 2-16
interference 1

J

Jackpot Reset 4-120
JP5 and JP6: 2-86
JP7, JP8 and JP9: 2-86
Jumper Sockets 2-86

K

KONAMI Maintenance System (KMS) 2-17
KONAMI Maintenance System (KMS) Main Menu 2-17

L

LCD Controls 5-125
LCD Touchscreen 2-16
Lock Cams 2-10
Lock Dimensions 2-10
Lock Hardware 2-10
Lock Chart and Figure 2-10
Locks 2-10
Logic Door 2-10
Logic Door lock 2-11
Lot Number 2-8
Low Battery Errors 4-117
Lubrication 5-123

M

Machine 2
MACHINE TYPE 2-8
Main Control Board (MCTB) 93
Main Door 2-9
Main Door lock 2-11
MANUFACTURE DATE 2-9
Menu Description 2-28
Menu Description Table 2-18
Meter Light 94
Meter Unit 95

 © 2004 KONAMI GAMING

Meters-Audit, Software Meters- General - Page 1/17 2-18

N

Notices 2
Number, Serial Plate 3
Number:, Part 1
numbers, RMA 3

O

of, Date Publication 1
of, Location Serial Number Plate 3
On Line System Option-Comm Port 1 Lockup 2-54, 2-56, 2-57, 2-58, 2-59, 2-60, 2-61, 2-65
Operation 2-14
Operator 2, 2-16
Option Change Errors 4-117
Option In-Port 2-84
Option Out-Port 2-84
Option the Bill Acceptor 2-12
Options 2-28
Options, Setting 2-14
Out of Service 2-85

P

Parts Removal 91
PAY TABLE 2-15
Player 2
Player/Operator Interface 2-16
Policy, Warranty 3
Power Supply 92
Printer Assembly 94
Printer Errors 4-116
Procedure for All Reset 2-13
Process, RMA 3
Program Errors 4-117

R

RAM Errors 4-117
Refilling Hopper 2-17
Required Tools 89
Return Merchandise Authorization 2-5
RMA 2-5
ROM Version Errors 4-116
RTC (Real Time Clock) Errors 4-114

S

Select Line Buttons 2-16
Self Diagnostic On Boot Errors 4-117, 4-118
SERIAL NUMBER 2-9
Serial Number 2-8
Serial Number and Lot Number 2-8
serial plate 2-8
Service, Customer 1
Set-Up & Operation 2-5
Setting Options 2-28
Slot Accounting System 2-7
Software Meters 2-18, 2-19, 2-20, 2-21, 2-22, 2-23, 2-24, 2-25, 2-26
Software Meters-Audit Meters- General - Page 1/17 2-18
Software Meters-Audit Meters-Detail Page 2/17 2-19
Software Meters-Audit Meters-Detail Page 3/17 2-19
Software Meters-Audit Meters-Detail Page 4/17 2-20
Software Meters-Audit Meters-Detail Page 5/17 2-20, 2-22
Software Meters-Audit Meters-Detail Page 6/17 2-21
Software Meters-Bill Meters/Bill Log-Detail Page 7 2-21
Software Meters-Cash Ticket Log 2-23
Software Meters-Cash Ticket Log-Page 10/17 2-23
Software Meters-Cashout Log-Page 9/17 2-23
Software Meters-EFT Log-Page 12/17 2-24
Software Meters-Game Meters - General 2-23
Software Meters-Game Meters-Detail-Page 15/17 2-25
Software Meters-Game Meters-Detail-Page 16/17 2-26
Software Meters-Game Meters-General-Page 14/17 2-24, 2-25
Software Meters-Jackpot Receipt Log-Page 11/17 2-23
Software Meters-System Bonus Log-Page 13/17 2-24
Software Meters-Voucher Log-Page 8/17 2-22
stamped serial number 2-9
Stand Drill Guide 2-6
START UP 2-13
SUB GAME AREA 2-14
Sub-Door (Belly Door) 2-9
Sub-Door lock 2-11
SUB-MESSAGE AREA 2-14
Support, Customer 3
System Battery 5-126
System Option-Machine Number 2-42, 2-43, 2-44, 2-45, 2-46, 2-47, 2-48, 2-49, 2-50, 2-51, 2-52

 © 2004 KONAMI GAMING

T

tags, RMA 3
Terminology 2
the, Changing EL Key 2-14
Thermometer Errors 4-116
Ticket Printer 2-16, 2-75, 2-76, 2-77, 2-78, 2-79, 2-81, 2-82, 2-83
Top Box 2-10
Topbox Door Switch 91
Touch Screen Errors 4-115
Troubleshooting Chart 4-111
Troubleshooting Charts 4-111
Turning Off the Power Switch 2-8
Turning On the Power Switch 2-13

U

Unpack and Inspect 2-5

V

VAC 2-9
Validator Module 5-124

W

Warranty 3
When the Coins are Jammed in the Coin Track Unit 4-120

 © 2004 KONAMI GAMING

Module 8

Appendix

This Module includes consumable parts list.

Lights

The following table lists the required bulbs for the K2V 1.5 machine.

Bulbs	
Part #	**Description**
490003	LAMP,FL,F15T8/CW,HUC17
490072	LAMP,FLOURESCENT,SMALL
490082	BULB,12 VOLT,WEDGE
490084	BULB,FLUORESCENT,5/8DIA X 6" LG. 4WATT
490085	LAMP,INCANDESCENT,PANEL,BUTTON

Electrical Components

The following table lists the required electrical components for the K2V 1.5 machine.

Electrical Components	
Part #	**Description**
490000	STRTR,FS5,HUC17
490001	STRTR,FS2,HUC17
490008	KEYSWITCH,ROTARY,SLIDE
490044	SWITCH,CHERRY,E79-30A
490046	SWITCH,OMRON,SBMIN,W/ROLLER ACTUATOR
490050	SWITCH,OMRON,SBMIN,W/LEVER ACTUATOR
490051	SOCKET,FLUORESCENT
490052	SOCKET,STARTER
490053	BALLAST,4-6-8-WATT
490054	BALLAST,13-22 WATT
490065	SENSOR,PHOTO,ALEPH
490067	SWITCH,ROCKER,MINI,8 AMP,EURO STYLE,.187
490070	SOCKET,FLOURESCENT,F4 BULB

Fuses

The following table lists the required fuses for the K2V 1.5 machine.

Fuses	
Part #	**Description**
490033	FUSE,2AMP,S/B
490034	FUSE,5AMP,S/B
490036	FUSE,10AMP,CERAMIC
490037	FUSE,8AMP,S/B
490080	FUSE,CARTRIDGE,GLASS,SLO-BLO,.4A,250V
490081	FUSE,CARTRIDGE,GLASS,SLO-BLO,3A,250V
490055	HOLDER,FUSE,3453LF1-010
490056	HOLDER,FUSE,KNOB,3453LF1-020

Calibration Paper

The following table lists the Bill Validator calibration paper for the JCM and Mars Bill Validators.

Calibration Paper	
Part #	**Description**
490059	PAPER,CALIBRATION,BV,U.S.,JCM
490060	PAPER,CALIBRATION,BV,U.S.,MARS

© 2004 KONAMI GAMING

PCBs

The following table lists the PCB assemblies for the K2V 1.5 machine.

PCBs	
Part #	**Description**
530011	PCB, DOOR BD, DCNB-2
530012	PCB, I/OBB-2
530013	PCB, I/OAB-2
530014	PCB, COMB-2
530219	PCB, BCKB3,K2V 1.5
530030	PCB, UNIT, MNCNTRL-1 & NON-VOL MEM BDS-2

Board Components

The following illustrations indicate the main components on the PCBs used in the K2V 1.5.

Main Control (MCTB)

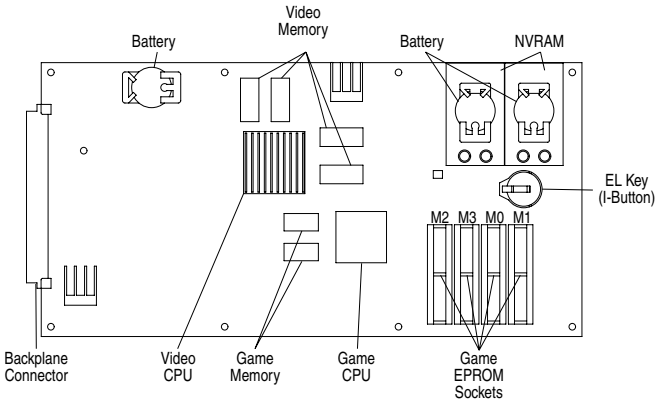

Backplane (BCKB-3)

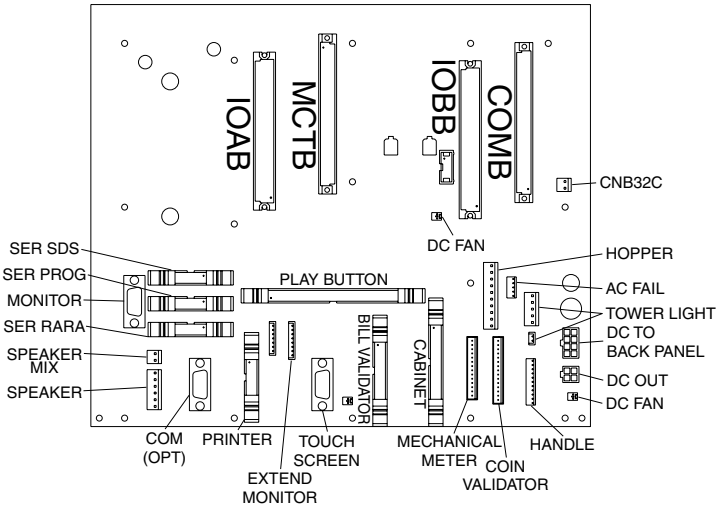

Communication (COMB-2)

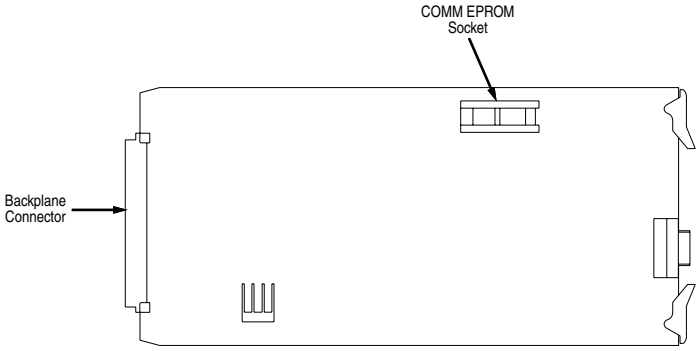

Hopper Components

The following table lists the components required to convert the hopper denomination.

Hopper Parts			
Part	**5¢**	**25¢**	**$1**
Knife	190389	190389	190390
Shelf Wheel	190386	190387	190388
Pin Wheel	190384	190384	190385
Agitator	190382	190382	190383
Coin Wiper	190380	190380	190381
Coin Count Arm Spring	450276	450276	450277
Coin Shield Weldment	130194	130194	130195
Hopper Basket Plate	130192	130192	130193

© 2004 KONAMI GAMING